AGA155

Central-i 240 VAC Power Amplifier

Product Manual

agito

www.agito-akribis.com

Member of Akribis Systems group

Revision History

Version	Description	Date
1.1	Product description revised to: Central-i 240 VAC Power Amplifier. Updated for CE compliance. Corrections of various specifications and figures.	9 June 2021
1.0	Initial release	18 April 2021

Contact Information

Manufacturer	Agito Akribis Systems Ltd., Member of Akribis Systems Group
Address	6 Yad-Harutsim St., P.O.Box 7172, Kfar-Saba 4464103
Telephone	+972-9-8909797
Website	www.agito-akribis.com

Copyright Notice

©2021 Agito Akribis Systems Ltd.

All rights reserved. This work may not be edited in any form or by any means without written permission of Agito Akribis Systems Ltd.

Products Rights

AGDx, AGCx, AGMx, AGAx, AGIx, and AGLx are products designed by Agito Akribis Systems Ltd. in Israel. Sales of the products are licensed to Akribis Systems Pte Ltd. under intercompany license agreement.

Agito Akribis Systems Ltd. has full rights to distribute above products worldwide.

Disclaimer

This product documentation was accurate and reliable at the time of its release.

Agito Akribis Systems Ltd. reserves the right to change the specifications of the product described in this manual without notice at any time.

Trademarks

Agito PCSuite is a trademark of Agito Akribis Systems Ltd..

Warranty

This product is warranted to be free of defects in material and workmanship and conforms to the specifications listed in this manual, for a period of 12 months from the shipment date from factory.

Contents

1 Product Description 4
1.1 General Description 4
1.2 Part Numbering 4
1.3 System Design 5
1.4 Technical Specifications 5
1.5 Environmental Specifications 8
2 Safety 9
2.1 Safety Symbols 9
2.2 Safety Guidelines 9
2.3 Compliance 10
3 Installation 11
3.1 Unpacking and Packing 11
3.2 Mounting 11
3.2.1 Mounting the AGA155 11
3.2.2 Mounting Multiple Power Amplifiers 12
3.3 Electrical Installation 13
3.3.1 Power Wiring 13
Regeneration 13
3.3.2 Circuit Breakers 14
3.3.3 AC Line filter 15
3.3.4 Safe Operating Area (SOA) 15
3.3.5 Grounding 16
Ground Domains 17
Grounding Policy 17
3.3.6 PT100/PT1000 Temperature Sensors 17
3.4 Electrical Interfaces 18
3.4.1 Interface X14: I/O and Brake Power 18
3.4.2 Interface X15: Interface Safety 19
3.4.3 Interface X7: Motor 21
For Brushless Motor 21
For Brush (or Voice Coil) Motor 21
3.4.4 Interface X8: Static Brake 22
3.4.5 Interface X9: Regeneration 23
3.4.6 Interface X10: Power 24
3.4.7 Interface X13: Central-i 25
3.4.8 Interface X2: Main Encoder 26
3.4.9 Interface X4: Halls 27
3.4.10 Interface X5: System I/O 28
Electrical Schematics for I/O Connections 30
4 Operation 33
4.1 Motor Configuration 33
4.2 Drive/Motor Overload Protection 35
4.2.1 I^2T Over Load protection 35
4.2.2 Motor Stuck 36
4.2.3 Motor Temperature Protection 37
4.3 Tuning 38
4.3.1 Commissioning 38
4.3.2 Current Loop Tuning 39
4.3.3 Auto Velocity and Position Loop Tuning 40
4.3.4 Manual Velocity and Position Loop Tuning 43
5 Maintenance and Servicing 45

1 Product Description

1.1 General Description

The AGA155 series is a family of 220VAC remote power amplifiers.

AGA155 amplifiers are controlled by an AGM series Central-i master controller, which reads encoder values and current samples from amplifiers, performs control loops calculation, and generates PWM commands for each amplifier.

Communication between AGA amplifiers and AGM master is through a fast Central-i fieldbus, which supports 16 kHz sample rate motion profiler and all servo loops.

AGA155 amplifiers can power motors up to 10 A_{rms} continuous and 20 A_{rms} peak current.

The AGA155 amplifier is equipped with digital and analog I/Os suitable for typical actuator and applications. The digital outputs are capable of sourcing up to 300 mA or sinking up 500 mA, which is sufficient for driving most external devices and end effectors, and eliminates the need for an external relay circuit.

Figure 1. AGA155

1.2 Part Numbering

Product Description	Part Number Format
Remote amplifier	AGA155-CI-2Axx

CI: Central-i communication

xx: Continuous and peak current options

- 03: 3 A_{rms} continuous, 9 A_{rms} peak
- 06: 6 A_{rms} continuous, 18 A_{rms} peak
- 10: 10 A_{rms} continuous, 20 A_{rms} peak

Example: AGA155-CI-2A06 indicates 6 A_{rms} continuous, 18 A_{rms} peak current

1.3 System Design

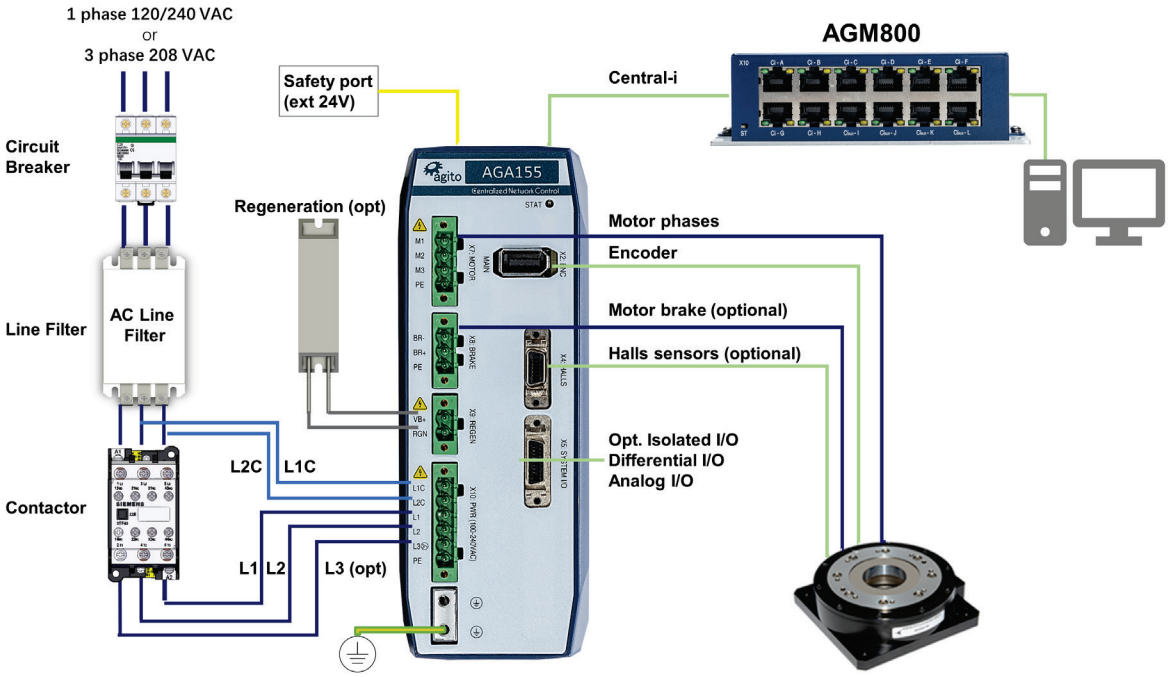

Figure 2. System connections and wiring

Notes

- One-phase wiring: AC connects to L1 and L2
- Option: 100/300 VDC instead of 120/240 VAC

1.4 Technical Specifications

Electrical/Mechanical Specifications

Feature	AGA155-CI-2A03	AGA155-CI-2A06	AGA155-CI-2A10
Number of axes	1		
Power supply	1-phase 120/240 VAC, 50-60 Hz		
	3-phase, 208VAC , 50-60 Hz		
Continuous output current (Internally limited by firmware)	3 A_{rms}	6 A_{rms}	10 A_{rms}
Peak output current (Internally limited by firmware)	9 A_{rms}	18 A_{rms}	20 A_{rms}
Output power @ 110 VAC	0.33 kVA	0.66 kVA	1.1 kVA
Output power @ 240 VAC	0.72 kVA	1.44 kVA	2.4 kVA
Input current @ 1-phase 120-240 VAC	4.5 A_{rms}	9 A_{rms}	15 A_{rms}
Input current @ 3-phase 208 VAC	3 A_{rms}	6 A_{rms}	10 A_{rms}
Peak current time	1.5 sec		
Output Frequency	0 – 599 Hz		
Short-circuit rating	Rated short-circuit breaking capacity: 5 kA*		

Feature	AGA155-CI-2A03	AGA155-CI-2A06	AGA155-CI-2A10
Isolated inputs	8		
Isolated outputs	2		
Bi-directional differential I/Os (RS422)	1		
Analog inputs	1 (12-bit optional 16-bit)		
Analog outputs	N/A		
PT100/PT1000 inputs	1		
Brake outputs	1		
Regeneration outputs	1		
Encoder ports	1		
Motor types	Voice coil, brushed or brushless linear or rotary motor. 2-phase steppers (open and closed loop, micro-stepping)		
Communication	Central-i		
PWM Frequency	16 kHz		
Power supply to external devices	Voltage: 5V Overall max. current: 1.5A		
Maximum leakage current	6 mA		

Encoder Ports Specifications

Feature	Specification
Encoder types	Incremental AqB, Sin/Cos Absolute: EnDat 2.2, BiSS-C
Power supply to encoder	0.5 A per encoder port
Max. cable length	40 m
Incremental encoder	Hardware: Differential RS422/RS485 Max. input frequency: 6.25 MHz Termination: 120 Ω Commutation: Auto-phasing, Hall sensors
Sin/Cos encoder	Hardware: Differential RS422/RS485, 1V pkp @2.5V Max. input frequency: 250 kHz Termination: 120 Ω Max interpolation: 13 bits (x 8192) Commutation: Auto-phasing, Hall sensors
Absolute BiSS-C	Hardware: Differential RS422/RS485, clock (MA), data (SLO) Clock frequency: 1 MHz Max. position bits: 32 bits Commutation: Auto-phasing, by absolute offset
Absolute EnDat 2.2	Hardware: Differential RS422/RS485, clock, data Clock frequency: 1 MHz Max. position bits: 32 bits Commutation: Auto-phasing, by absolute offset
Hall sensors	Opto-isolated 5V with internal or external power supply

I/O Specifications

Feature	Specification
Power supply for optically isolated I/Os	Voltage: 5-28 VDC
Optically isolated digital inputs	Type: PNP/NPN Propagation delay: 10 µs Max. frequency: 100 kHz Functionality: limit switches, home, captures, start motion, gain scheduling, and others
Optically isolated digital outputs	Type: PNP/NPN Max current: 0.5A (for NPN type), 0.3A (for PNP type) Propagation delay: 10 µs Max. frequency: 100 kHz Functionality: alarm, in-position, event (PEG), and others
Differential digital inputs	Hardware: Differential RS422 Propagation delay: 100 ns Max. frequency: 2 MHz Functionality: lock (capture), pulse and direction, Handwheel
Analog inputs	Operational voltage: ±10V Resolution: 12 bit
Analog outputs	N/A
Static brake output	Operational voltage: 24V Maximum current: 3A
Temperature sensors inputs	PT100 or PT1000. Refer to the section PT100/PT1000 Temperature Sensors.

Central-i Specifications

Feature	Specification
Topology	Star (pier to pier)
Cycle time	61 µs
Connector type	RJ-45 (Cat5e cable)
Cable length	Up to 100m
Physical layer	Dual channel RS485 full duplex
Baud rate	20 Mbps (per channel)
Synchronization between nodes	8 nanosecond

Dimensions and Weight

Feature	Specification
Unit dimensions (max)	H=196.97 mm, W=65.80 mm, D=158.60 mm
Package dimensions	244 mm x 92 mm x 198 mm
Unit weight	1.29 kg
Shipping weight	1.44 kg

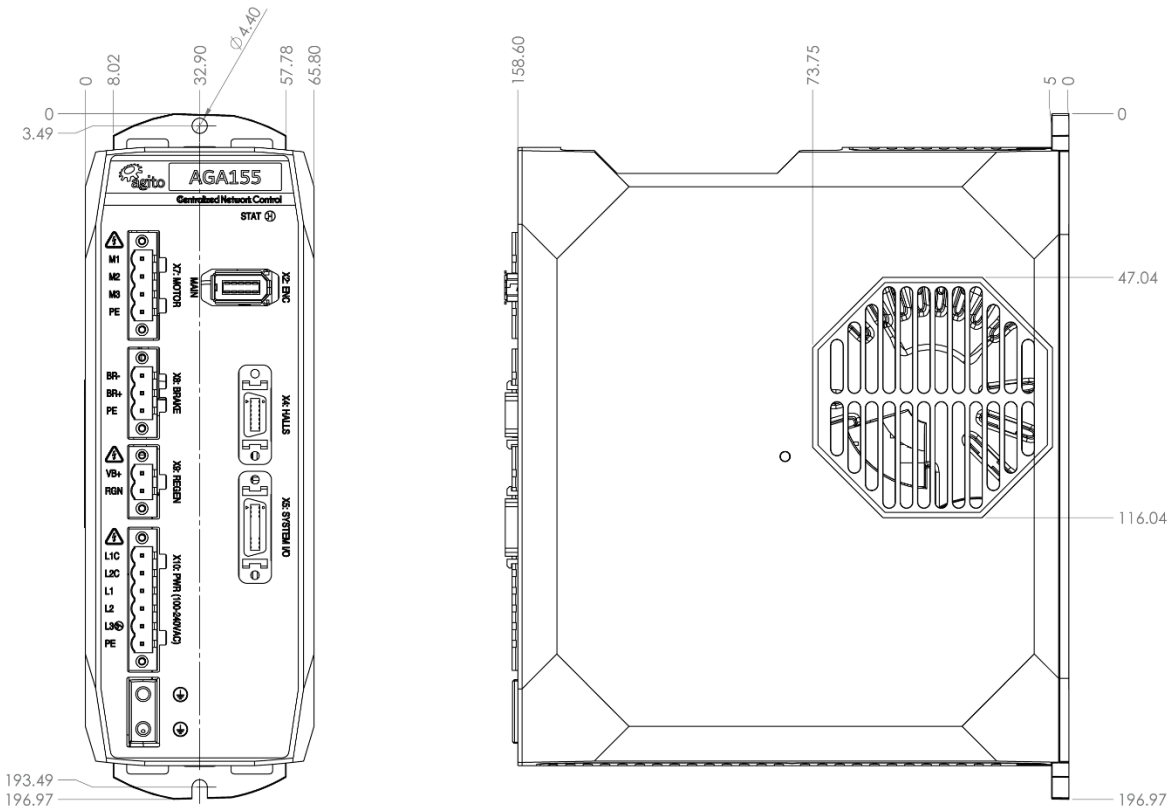

Figure 3. Product dimensions (mm)

1.5 Environmental Specifications

Environmental Specifications

Feature	Specification
Operating temperature*	AGA155-CI-2A03: 0°C to 50°C AGA155-CI-2A06: 0°C to 50°C AGA155-CI-2A10: 0°C to 40°C
Storage temperature	-20°C to 70°C
Operating humidity	< 90%
Storage humidity	< 40%
Pollution degree	2
Vibration	1G @ 150 Hz according to IEC 60068-2-6
Operating conditions	Protection class: IP20

* The operational range may be additionally limited by the internal temperature protection of the product. Refer to the section Safe Operating Area (SOA). However, it is the user's responsibility to avoid operating the product in environmental conditions that do not conform to the defined limits.

2 Safety

2.1 Safety Symbols

Safety symbols indicate a potential for personal injury or equipment damage if the prescribed precautions and safe operating practices are not followed.

The following safety symbols are used in the product documentation.

Safety Symbols

Symbol	Meaning	Description
	Hazardous voltage	Indicates hazards arising from dangerous voltages.
	Earthing PE (protective earth)	Identifies any terminal which is intended for connection to an external conductor for protection against electric shock in case of a fault, or the terminal of a protective earth (ground) electrode.
	Caution, hot surface	Indicates the marked item can be hot and should not be touched without taking care.

2.2 Safety Guidelines

To achieve optimum and safe operation of the product, it is important to follow the safety procedures specified in this manual.

Only qualified personnel may install, maintain, or repair the product. Before starting installation, maintenance or operation, ensure that all system components are connected to protective earth ground (PE).

The PE wire must be colored green-yellow, in accordance with local electrical wiring standards.

This product contains electrostatic-sensitive components. Proper handling procedures must be observed to avoid damage to the product.

To avoid electric arcing and hazards, never connect or disconnect any connector while the power source is on.

The maximum power supply voltage connected to the product must comply with the ratings provided in this manual.

Always disconnect the power cables before servicing the product.

Pay attention to safety symbols on the product or in the manual. Follow proper safety precautions when installing or operating the product.

Attention

All power connectors must be securely tightened before any operation.

Warning

Connectors X10, X9, and X7 are high power. Do not touch these connectors when the product is powered.

Warning

Capacitors on the DC bus can retain hazardous voltages after input power has been removed. Discharge time to below 75 VDC is 40 minutes.

Wait until the red LED (Charge indicator) shuts off before physically touching the product. The product must not be opened or serviced until the discharge is complete. Failure to observe this precaution could result in severe bodily injury or loss of life.

Attention

Do not attempt to hinder or override the product's or system's fault detection or protection circuits. You must determine the cause of a fault and correct it before you attempt to operate the system. Failure to correct the fault could result in personal injury and/or damage to equipment.

2.3 Compliance

Standards Compliance

Description	Standard
Safety requirements – Electrical, thermal and energy	IEC-61800-5-1
EMC requirements and specific test methods	IEC-61800-3

This product is intended to operate in a machine or equivalent end-product. The machine or end-product must comply with any necessary safety standard as typically required for the same type of machine or end-product. It is the responsibility of the machine or end-product manufacturer to ensure the final machine or end-product meets the requirement of any safety and EMC regulations.

3 Installation

3.1 Unpacking and Packing

Save the original box and packing materials in case you need to pack and return the product to the manufacturer.

To unpack the product:

1. Carefully remove the product from the box and the packing materials.
2. Visually inspect the product to ensure that there is no damage. If any damage has occurred, report it immediately to the carrier that delivered the package.
3. After unpacking, locate the part number label on the product, and make sure it matches the product your ordered, and that the voltage meets your specific requirements.

3.2 Mounting

3.2.1 Mounting the AGA155

The heatsink on the back of the AGA155 includes a hole (at top) and a slot (at bottom) for mounting the unit. The AGA155 must be mounted vertically (book mounting), as shown in Figure 3.

The AGA155 is mounted using 2 M4 screws. It is important to mount the product on metal panel for both grounding and secure connections.

The heatsink of the AG155 is electrically conductive and serves as the protective earth (PE) ground of the product. However, it is critical to ensure the PE screws are electrically conducting between the PE of AGA155 and the PE of main power supply in the system.

All cables connected to the product must be securely constrained to avoid vibration that causes stress concentration at the cables or connectors which may result in breakage of electrical conductivity.

Warning – Metal Base Plate for Heat Dissipation

The product is supplied with the mounting plate built into the heatsink. At full power operation, the heat sink can be quite warm, around 45°C. It is recommended to mount the product on a large metal panel to help dissipate the heat generated in the product.

3.2.2 Mounting Multiple Power Amplifiers

When mounting multiple amplifiers within a cabinet, clearance between units must be at least 10 mm. In addition, top and bottom clearance must be at least 50 mm.

Ambient temperature in the cabinet must not exceed the limit defined in section Safe Operating Area (SOA).

If amplifiers are mounted on a backplane, the backplane temperature must not exceed the limit defined section Safe Operating Area (SOA).

It is recommended to install a cooling fan at the bottom of the cabinet for best circulation.

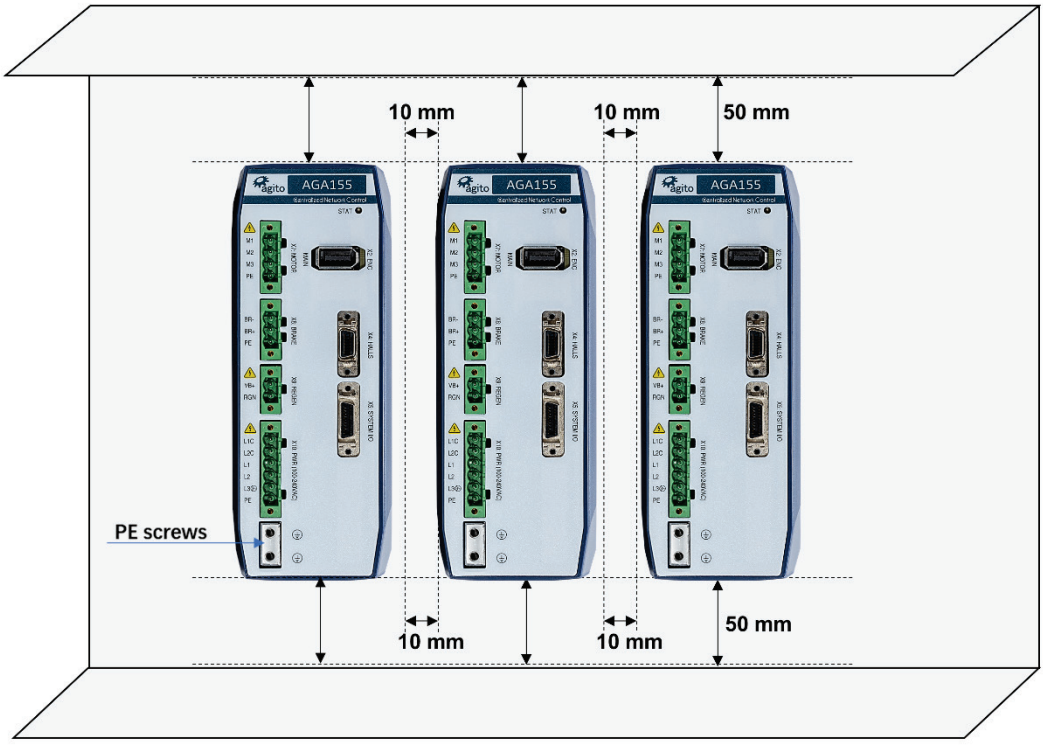

Figure 4. Mounting multiple amplifiers within cabinet

3.3 Electrical Installation

3.3.1 Power Wiring

AGA155 is designed to operate directly from 110 VAC to 240 VAC mains power, which is supplied to bus voltage, to motor, and to logic power.

Logic power input (L1C, L2C) uses 1-phase 120 VAC to 240 VAC input.

Motor power input (L1, L2, L3) uses either of the following:

- 1-phase 120-240 VAC input
- 3-phase 208 VAC input

Note – Wiring

In single phase wiring, L1 and L2 must be wired to 1-phase 110/240 VAC.
In three phase wiring, L1, L2 and L3 must be wired to 3-phase 110/240 VAC.

Regeneration

AC power input is converted to DC bus, and outputs a controlled electrical power through the phases of the motor. The motor converts this electrical power to a mechanical power that moves the load.

During motor deceleration and stopping, the inertia of the load drives the movement of the motor, not the servo drive. Due to back EMF, the motor acts as a generator and returns energy to the DC bus supply, which causes the DC bus voltage to increase to undesirable level.

Maximum allowable DC bus voltage is 400 VDC. To control the DC bus voltage, a regeneration resistor can be connected to the servo drive to dissipate excess regenerated energy, and prevent it from reaching undesirable levels. The regeneration resistor starts to dissipate energy at 370 VDC .

Warning

DC Vbus is monitored, and motors will be disabled if voltage is too high. However, there is no protection against the connection of an excessive voltage power supply that will damage the product.

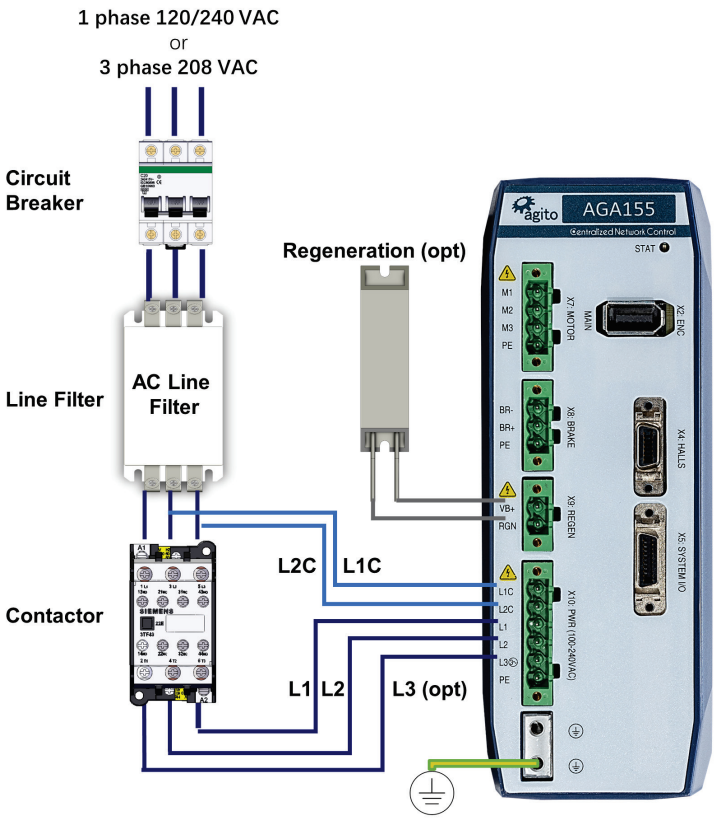

Figure 5. Power supply wiring

3.3.2 Circuit Breakers

Circuit Breaker Specifications

Feature	Specification
Circuit breaker type	Type C. 2-pole for L to N. 3-pole for 3-phase.
Fuse type	Time delay / slow blow
Current rating	AGA155 10A: 25 A AGA155 6A: 10 A AGA155 3A: 6 A
Voltage rating AC	600 VAC
Interrupt rating	minimum 10 kA

Example: circuit breaker: SE iC60N 3P 6A C

3.3.3 AC Line filter

For proper product operation, an external AC line filter is required. Refer to Figure 5. Power supply wiring. The AC line filter prevents external transients and spikes on the power line from entering the product enclosure. Such interference may be caused by other AC powered devices being turned on and off, and by motors running on the same power subsystem

AC Line Filter Specifications

Feature	Specification
Filter type	2 stage AC line filter
Current	20 Amp
Voltage	250 VAC
Antennation frequency	From 100Khz to 50 MHz

Example: Wurth 810913020

3.3.4 Safe Operating Area (SOA)

While each specific maximal rating can be safely used, the product cannot support certain combinations of these maximal ratings. For example, the product will not enable operation under the following **combined** maximal ratings usage continuously over long-term period:

- Continuous current at $6A_{rms}$, at 90% PWM duty cycle
- 1.5A external load on the 5V supply
- Product mounted horizontally and not attached to a suitable base plate
- 55°C ambient temperature

Permitted combinations, as well as forbidden combinations, cannot be specifically provided since they are a function of multiple conditions, such as continuous current, bus voltage, PWM duty cycle, 5V consumption, I/O's high current usage, mounting base plate size, product mounting orientation, and ambient temperature.

The SOA of the product is defined as any combination of operational conditions (each within the absolute maximal ratings defined in Section) and assembly options that lead to internal product temperature below 80°C.

The product includes a built-in temperature sensor. Its internal temperature is reported via the status parameter PwrTemp (integrated power module temperature). When PwrTemp reaches 80°C, the motor will be disabled and an error will be reported. A motor-enable request will create an error if PwrTemp is higher than 80°C.

The following figure shows examples of safe operating cases for AGA155-CI-2A06. The SOA charts assume 90% duty cycle on PWM output continuously; that is, motors are moving at the maximum speed allowed by the bus voltage.

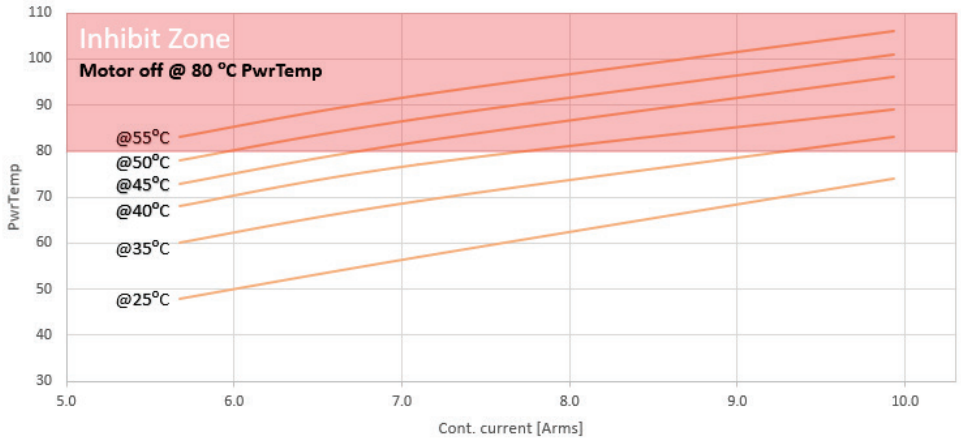

Figure 6. Current/Temperature

Attention

Each of the power/voltage/current absolute maximal ratings is valid over the overall operating temperature range, subject to the safe operating area (SOA) .

Attention

Operating (or storing) the product contrary to the defined absolute maximal ratings is not allowed and will damage the product.

3.3.5 Grounding

It is recommended to install the AGA155 on a metal plate for better power dissipation, reduced EMI, and grounding connection. Make sure the plate is not painted.

The heatsink of the AGA155 is electrically conductive and serves as the protective earth (PE) ground of the product. However, it is critical to ensure the PE screws are electrically conducting between the PE of AGA155 and the PE of main power supply in the system.

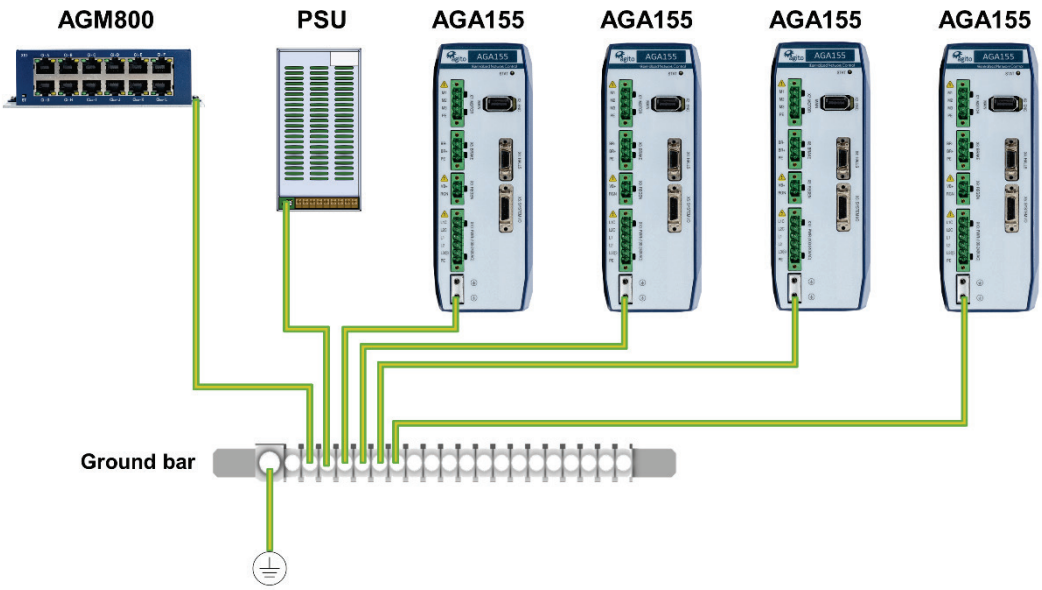

Figure 7. System grounding

Ground Domains

The following table shows the ground domains in the AGA155 system:

- GND. Reference voltage for digital/analog circuits and signals.
- PGND. High voltage ground domain (internal)
- General. Usually at DC potential close to GND, but not connected internally.

Ground Domains

Name	Ground Domain	Notes
DC power input	GND (I/O return)	External DC power supply
AC power input	PGND (power ground only)	Internal PGND
Central-i communication	GND (for master)	Isolated for Central-i remote devices
Isolated digital inputs/outputs	General	Isolated
Differential inputs/outputs (not isolated)	GND	
Analog inputs/outputs (not isolated)	GND	
Brake control output	General	External DC power supply
Regeneration output	PGND	

Grounding Policy

Grounding of the product must comply with the following guidelines:

- The enclosures and other external parts that may be touched by the user are in the **safe domain**.
- The AGA155 must be connected to protective earth (PE) and connected to the building's ground. PE is protected with an earth-leakage circuit breaker (ELCB); hence it is safe to touch. Refer to Figure 7.
- PGND is connected directly to mains wires, hence it is just as dangerous as mains to the user.
- All shielded cables, including but not limited to motor, encoders, and power input, have their shield connected to PE as part of the external metal enclosure.
- PGND is bypassed to PE with low capacitance (around 10 nF) for EMI/EMC purposes.
- It is critical to avoid ground loops in the system. A ground loop allows currents to return by two or more different paths, causing electromagnetic interference or even damage to wires.
- The system designer must carefully examine all GND connections in the system to ensure that no loops are created, and that all GND-referenced signals have a GND wire nearby (for both return currents and common mode voltage).

3.3.6 PT100/PT1000 Temperature Sensors

AGA155 supports two types of temperature sensors:

- The PT100 temperature sensor is a platinum resistance thermometer. Its resistance value at 0°C is **100Ω**.
- The PT1000 temperature sensor also a platinum resistance thermometer. Its resistance value at 0°C is **1000Ω**.

The temperature sensor is wired to the X4 connector as shown in the following table.

PT100/PT1000 Temperature Sensor Wiring

Pin #	Pin Name	PT100	PT1000
3	PT1000_EN	NC	Short to pin 6
6	GND	NC	Short to pin 3
8	RTD+	PT100+	PT1000+
9	RTD-	PT100-	PT1000-

3.4 Electrical Interfaces

This section provides a detailed description of all the power and signal interfaces of the product.

3.4.1 Interface X14: I/O and Brake Power

This connector allows user to provide DC power supply to the isolated I/Os and motor brake. Typically, the isolated I/Os use 24 VDC. The I/O power is internally connected to each I/O port to allow users to tap this power supply easily within the same connector.

The brake power support up to 48 VDC. This power is internally connected to the brake output port.

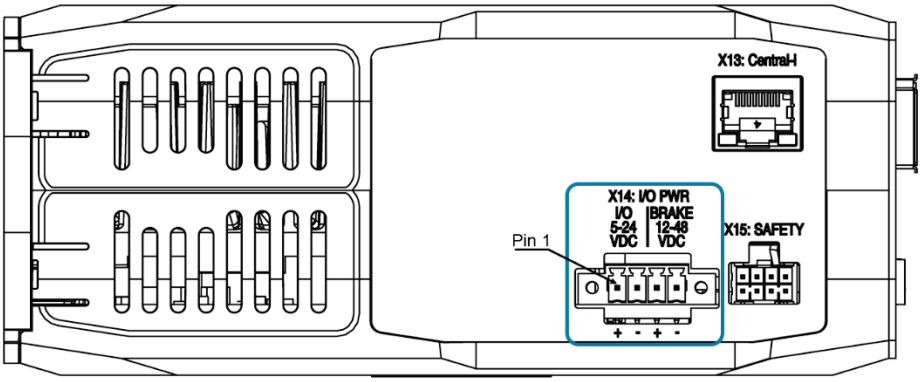

Figure 8. I/O and Brake Power Connector

Connector X14: I/O PWR

Pin #	Name	Description
1	IO_PWR	5 to 24 VDC – User supplied I/O power input, up to 2A
2	IO_PWR_Return	Ground – I/O power return
3	VBrake	12 to 48 VDC – Brake power input, up to 70W
4	VBrake_Return	Ground – Brake power return

Connector manufacturer	Phoenix Contact
Mating connector part number	1966114 (Wurth Electronics equivalent: 691364100004) (Degson equivalent: 15EDGKDM-3.5-04P-14)
Connector pitch	3.5 mm
Wiring	AWG 18, insulation rated for 100 V

Warning - Hot plugging is forbidden!

Plug or unplug the power connector only when power is off! Plugging the power connector when power is on may cause power surges through connected devices and possibly damage them.

3.4.2 Interface X15: Interface Safety

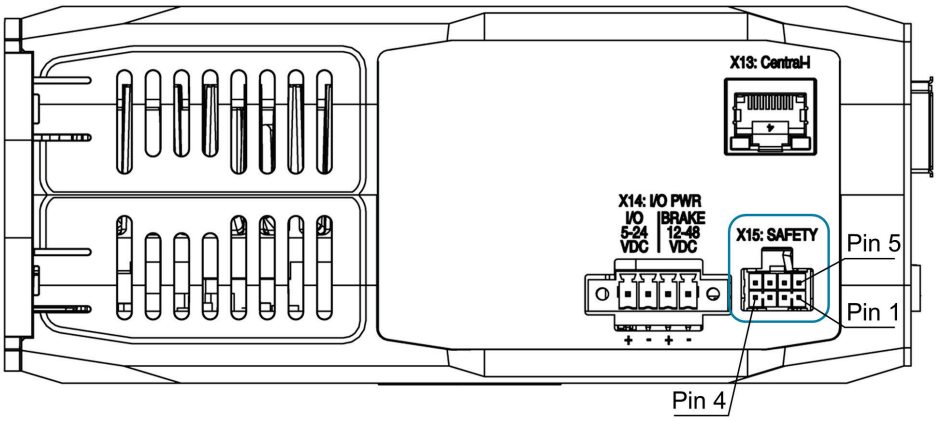

Figure 9. Safety Connector

Connector X15: SAFETY

Pin #	Name	Type	Description
1	5V	PWR - OUT	5V supply for safety circuits
2	Safety_Feedback-	OUT	Safety_Feedback negative (emitter) output
3	Safety_Input_2-	IN	Safety_Input_2 negative input
4	Safety_Input_1-	IN	Safety_Input_1 negative input
5	GND	PWR	GND
6	Safety_Feedback+	OUT	Safety_Feedback positive (collector) output
7	Safety_Input_2+	IN	Safety_Input_2 positive input
8	Safety_Input_1+	IN	Safety_Input_1 positive input

Connector manufacturer	Samtec Inc.
Mating connector part number	IPD1-04-D-K
Crimp contact part number	CCC79L-2630-01-L (or equivalent)
Wiring	26 AWG, insulation rated for 100 V

Notes – Safety Inputs Implementation

- Safety_Input_1 and Safety_Input_2 function independently, thus providing safety redundancy. Each one can disable the power to the motor.
- Both Safety_Input_1 and Safety_Input_2 disable the power to the motor through hardware circuitry, without any software intervention.
- Both Safety_Input_1 and Safety_Input_2 are defined with a positive pin (+) and a negative pin (-). However, the opto-coupler at the Safety_Input has two input diodes, which enable operation at

"positive" or "negative" input voltage. The input is activated when current is sufficient at one of the input diodes, regardless of the current direction. This enables NPN or PNP connection to the safety inputs.

- The Safety_Input protection logic is designed so that both Safety_Inputs must be powered to enable motor operation. Leaving a Safety_Input disconnected prevents motor operation. This logic is required to ensure that a disconnected safety cable is considered an unsafe condition by the control unit. When sufficient current is driven through a Safety_Input, the state of this input is **Safe**. When insufficient current is driven through a Safety_Input, the state of this input is **Unsafe**.
- The two Safety_Inputs must be in the Safe state to enable motor operation.
- Both Safety_Input_1 and Safety_Input_2, although acting on the drive hardware directly, are also monitored by the controller software. The controller software generates a feedback signal to the user (Safety_Feedback), which is also an isolated signal. This feedback is generated by the software, and is activated if at least one of Safety_Input_1 or Safety_Input_2 signals is in the Unsafe state.
- The electrical characteristics of the Safety_Input_1 and Safety_Input_2 are identical to those of all other discrete, isolated inputs of the controller.
- The safety inputs implemented in the product are currently pending certification Functional Safety Standards.

Electrical Interfaces – Safety Connector

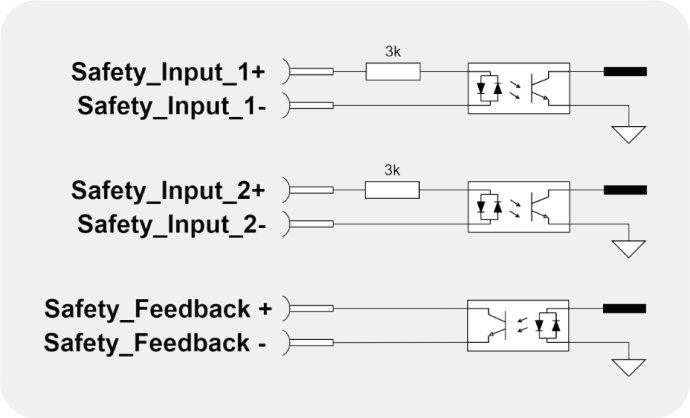

Figure 10. Electrical Interfaces – Safety Connector

3.4.3 Interface X7: Motor

The MOTOR port supplies power to the motor, which can be a 3-phase brushless motor, or a 1-phase brushed motor or voice coil motor.

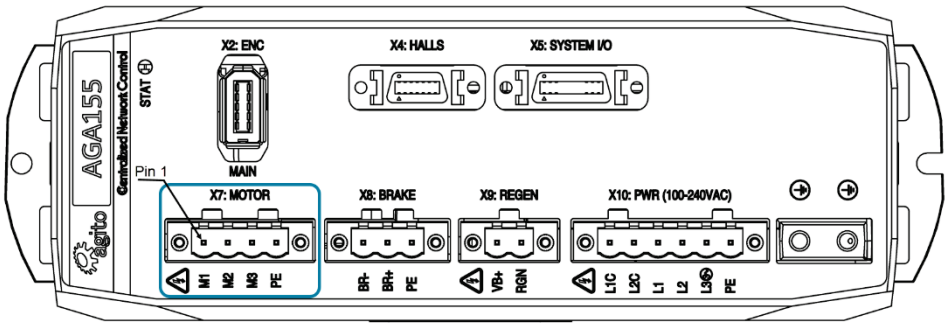

Figure 11. Motor Connector

For Brushless Motor

Connector X7: MOTOR (Brushless Motor)

Pin #	Name	Description
1	Phase A	Motor phase A, or M1
2	Phase B	Motor phase B, or M2
3	Phase C	Motor phase C, or M3
4	PE	Protective earth (motor power cable shield)

Connector manufacturer	Phoenix Contact
Mating connector part number	1942507 (Wurth Electronics equivalent: 691340500004) (Degson equivalent: 2EDGKDM-5.08-4P-14)
Connector pitch	5.08 mm
Wiring	14-16 AWG, insulation rated for 600 V

For Brush (or Voice Coil) Motor

Connector X7: MOTOR (Brushed or Voice Coil Motor)

Pin #	Name	Description
1	Motor Phase +	Positive terminal, phase A or M1
2	Motor Phase -	Negative terminal, phase B or M2
3	NC	Do not connect
4	PE	Protective earth (motor power cable shield)

Connector manufacturer	Phoenix Contact
Mating connector part number	1942507 (Wurth Electronics equivalent: 691340500004) (Degson equivalent: 2EDGKDM-5.08-4P-14)
Connector pitch	5.08 mm
Wiring	14-16 AWG, insulation rated for 600 V

3.4.4 Interface X8: Static Brake

Some motors come with a static brake, which is engaged when the motor is not enabled. The Brake port provides the interface to connect this static brake.

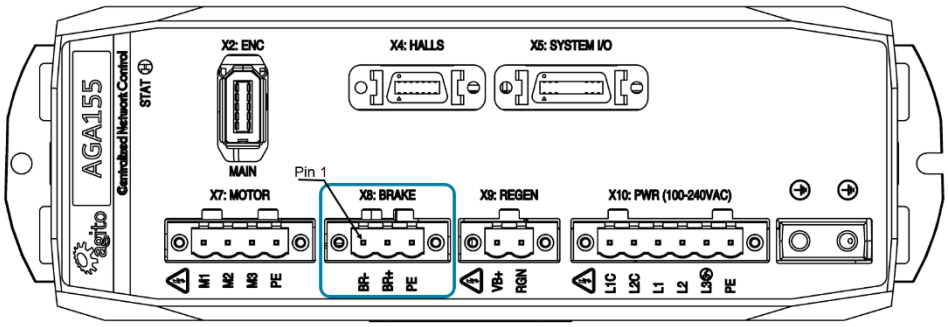

Figure 12. Brake Connector

Connector X8: BRAKE

Pin #	Name	Description
1	BR- (Static_Brake)	Static brake output for motor A. Open-drain output with built-in flyback diode to the VBrake for direct connection into inductive load.
2	BR+ (VBrake)	Power out to brake. Internally connected to X14: I/O PWR Pin-3, VBrake.
3	PE	Protective earth

Connector manufacturer	Phoenix Contact
Mating connector part number	1942497 (Wurth Electronics equivalent: 691340500003) (Degson equivalent: 2EDGKDM-5.08-3P-14)
Connector pitch	5.08 mm
Wiring	18-20 AWG, insulation rated for 100 V

Electrical Interfaces – Static Brakes

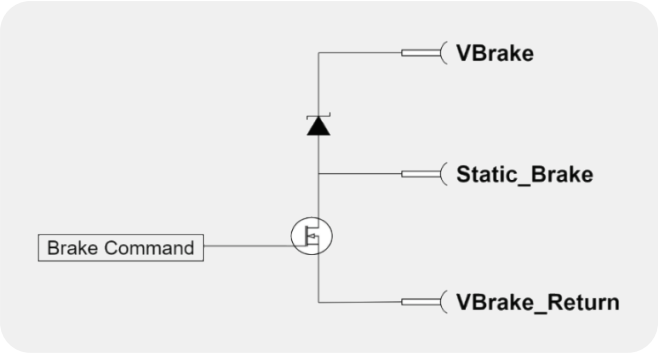

Figure 13. Electrical Interfaces – Static Brakes

3.4.5 Interface X9: Regeneration

The REGEN port is used to connect an external power resistor to dissipate energy generated by the motor, typically during deceleration. The motor-generated energy will charge up the internal capacitor. When the internal capacitor is fully charged, the bus voltage will increase. When bus voltage is higher than the operating limit of the product, it will trigger over-voltage protection and disable the motor. To prevent this from happening, users can connect an external power resistor to dissipate the unwanted energy.

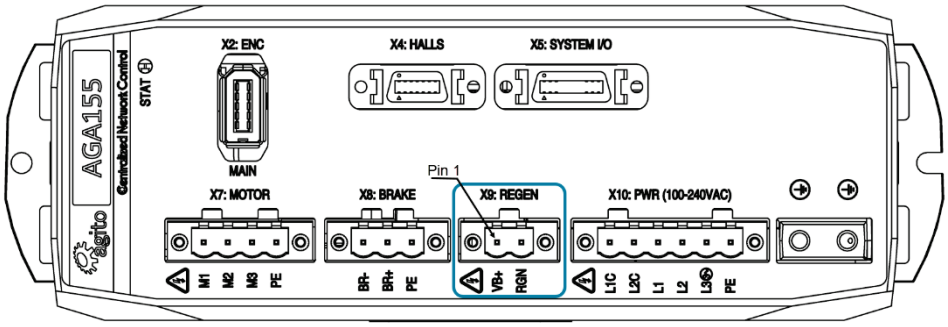

Figure 14. Regeneration Connector

Connector X9: REGEN

Pin #	Name	Description
1	VB+	The internal DC bus power. (Warning: This is typically more than 300 VDC)
2	RGN (Regeneration)	Regeneration pin to be connected to an external regeneration resistor. Designed for 16A (not protected). When Regeneration is triggered, this pin is connected internally to PGND. The other end of the external regeneration resistor should be connected to VB+, the Internal DC Bus power (pin 1).

Connector manufacturer	Phoenix Contact
Mating connector part number	1942484 (Wurth Electronics equivalent: 691340500002) (Degson equivalent: 2EDGKDM-5.08-2P-14)
Connector pitch	5.08 mm
Wiring	14-16 AWG, insulation rated for 600 V

Important Notes:

- The regeneration feature, once enabled, is always active, regardless of the motor status (enabled/disabled).
- Current will flow in the regeneration resistor depending on the values of RegenOn and RegenOff, and the power supply voltage.
- There are no current or power protections to protect the regeneration resistor or the internal MOSFET.
- Be sure to set the suitable regeneration parameters for the supply voltage and the external regeneration resistor.

- Plug in the regeneration resistor only after all parameters are set properly, and always when the controller power is off.
- Let the regeneration resistor cool down before touching it. Unplug it only when the controller power is off.
- During development, if the supply voltage is to be modified, first disconnect the regeneration resistor and, before reconnecting the regeneration resistor, be sure to adjust the regeneration parameters to match the new supply voltage.
- We recommend adding external protections (such as PTC) to protect the regeneration resistor.

3.4.6 Interface X10: Power

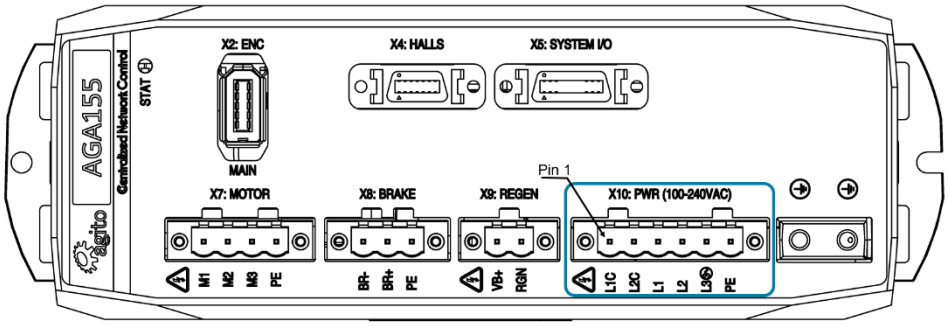

Figure 15. Power Connector

Connector X10: PWR

Pin #	Name	Description
1	L1C	AC logic power
2	L2C	AC logic power
3	L1	AC main power
4	L2	AC main power
5	L3 (3-phase)	AC main power for 3-phase power input
6	PE	Protective earth

Connector manufacturer	Phoenix Contact
Mating connector part number	1942523 (Wurth Electronics equivalent: 691359740006) (Degson equivalent: 2EDGKDM-5.08-6P-14)
Connector pitch	5.08 mm
Wiring	AWG 14, insulation rated for 600 V

Mains connections

Connect L1, L2 and L3 for main bus power.

If the main voltage is from a single-phase source, connect line and neutral to L1 and L2.

If the main voltage is from a three-phase source, connect the phase to L1, L2 and L3. Connect line and neutral to L1C and L2C for logic power.

Warning - Hot plugging is not supported!

Plug or unplug the power connector only when power is off and after the bus LED has turned off (red LED visible at the side of the product). Plugging the power connector when power is on may cause power surges through connected devices and possibly damage them.

3.4.7 Interface X13: Central-i

The section describes the communication port that is used for communication with the Central-i master controller, such as the AGM800.

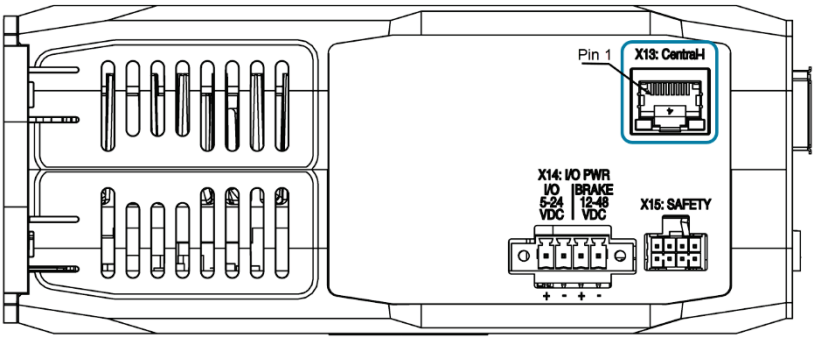

Figure 16. Connector (Central-i)

Connector X13: Central-I (RJ45)

Pin #	Name	Description
1	Central-i data0+	Bi-directional + data +
2	Central-i data0-	data -
3	Central-i data1+	data +
4	Central-i data2-	Bi-directional +
5	BI-_D3 central-i data2+	Bi-directional +
6	RX-_D2 central-i data1-	Receive data -
7	BI+_D45V_CI	Bi-directional +
8	BI-_D4CI_GND	Bi-directional -

Connector type	RJ45 LAN 10/100Base-T connector
Mating connector part number	Any CAT5e compatible shielded connector
Cable	CAT5e or higher, standard Ethernet straight cable
Wiring	26 AWG, 100 V

3.4.8 Interface X2: Main Encoder

The X2 port is designed to interface with the main (primary position feedback) encoder for the axis. This port supports digital quadrature incremental encoders (AqB), analog sin/cos incremental encoders, absolute BiSS-C encoders, and absolute EnDat2.2 encoders. The type of encoder connected to the AGA155 is configured in the software.

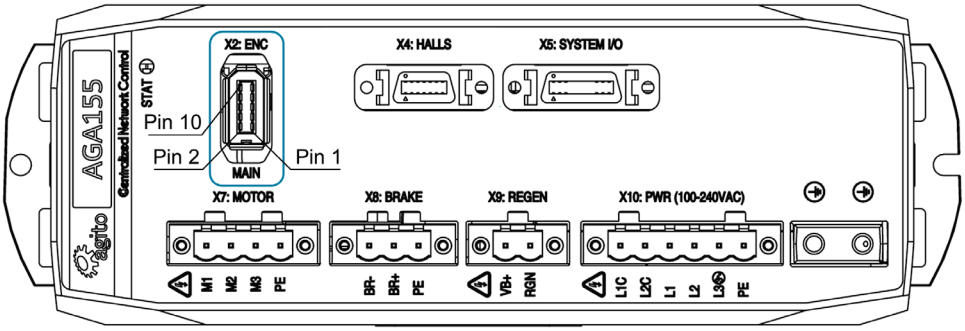

Figure 17. Main Encoder Connector

Connector X2: ENC (MAIN)

Pin #	Name	Encoder Types				Description
		AqB	Sin/Cos	BiSS-C	EnDat 2.2	
1	5V					5V power supply (limited to 0.5A per connector)
2	GND					5V return and reference for differential signals
3	Encoder_1+			CLOCK+	CLOCK+	Clock+ pin for absolute encoders
4	Encoder_1-			CLOCK-	CLOCK-	Clock- pin for absolute encoders
5	Encoder_2+	A+	SIN+			A+ (for AqB) or sin+ (for analog sin/cos)
6	Encoder_2-	A-	SIN-			A- (for AqB) or sin- (for analog sin/cos)
7	Encoder_3+	B+	COS+			B+ (for AqB) or cos+ (for analog sin/cos)
8	Encoder_3-	B-	COS-			B- (for AqB) or cos- (for analog sin/cos)
9	Encoder_4+	Z+	Z+	DATA+	DATA+	Data+ for absolute encoders, or Z+ for both AqB and analog sin/cos encoder
10	Encoder_4-	Z-	Z-	DATA-	DATA-	Data- for absolute encoders, or Z- for both AqB and analog sin/cos encoder

Connector manufacturer	3M
Mating connector part number	36210-0100PL + 36310-3200-008 (Sunchu equivalent: SC-10-4P)
Wiring	AWG 26, insulation rated for 100 V

Note – Incremental encoder interface details.

Each differential-pair includes a built-in 120Ω terminator and the required hardware circuits to detect a disconnected encoder cable. When a disconnected encoder cable is detected, the controller will disable the motor. The detection is done on the A and B channels only (not on the index or Z-channel).
By default, the product does not support single-ended encoder. For use of single-ended encoder, contact Technical Support.

Note – 5V supply limitation.

The maximum current available for the encoder is 0.5 A.

3.4.9 Interface X4: Halls

The HALLS connector interfaces with the digital Hall effect sensors and PT100 temperature sensor from the motor.

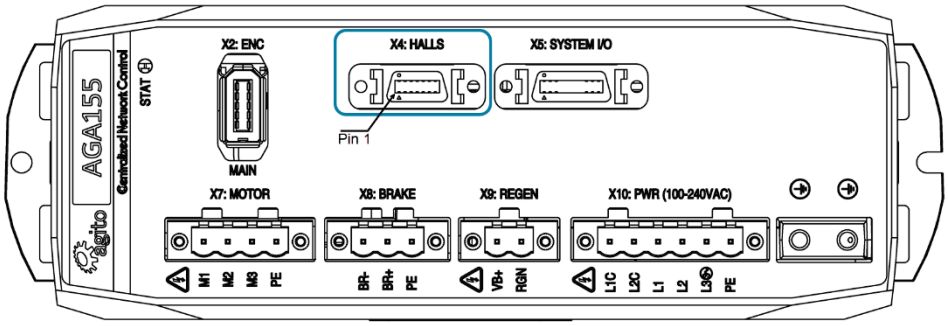

Figure 18. Hall Sensors Connector

Connector X4: HALLS

Pin #	Name	Software Representation	Description
1	5V		5V supply to Hall sensors. Connect to pin 10 when using digital inputs 1 to 3 for Hall sensors.
2	GND		GND for 5V
3	PT1000_EN		For PT1000 temperature sensor, this pin is shorted to pin 6 (GND). For PT100 temperature sensor, this pin is not connected.
4	Digital_Input_1 (Hall_A)	DInPort.Bit(0)	Isolated digital input 1 (NPN or PNP, depending on connection of the common pin of this group). To use as Hall input, go to the Agito PCSuite Digital Input page, and configure as Hall A.
5	Digital_Input_2 (Hall_B)	DInPort.Bit(1)	Isolated digital input 2 (NPN or PNP, depending on connection of the common pin of this group)
6	GND		Do not connect
7	PE		PE
8	RTD+		PT100+ (or PT1000+ if Pin 3 is shorted to pin 6)
9	RTD-		PT100- (or PT1000- if Pin 3 is shorted to pin 6)

10	Digital_Input_Common (1 to 3)		Common pin (power or return, depending on external connection) for digital input 1 to 3
11	Digital_Input_3 (Hall_C)	DInPort.Bit(2)	Isolated digital input 3 (NPN or PNP, depending on connection of the common pin of this group)
12	Digital_Input_4	DInPort.Bit(3)	Isolated digital input 4, PNP only. For a thermostat input, one end is connected to IO_RTN, the other end is connected here
13	IO_PWR		Internally connected to connector X14: I/O PWR pin 1
14	IO_PWR_Return		Internally connected to connector X14: I/O PWR pin 2

Connector manufacturer	3M
Mating connector part number	10114-3000PE + 10314-52A0-008 (Sunchu equivalent: SC-14-3)
Wiring	AWG 26, insulation rated for 100 V

Note – 5V supply limitation

The 5V supply provided at pin 1 is limited to 0.5A per connector. The maximum total current provided by all the 5V pins in the product is limited to 1.5A.

3.4.10 Interface X5: System I/O

The SYSTEM I/O port interfaces with I/O devices, such as a limit sensor and home switch, which are typically mounted on the actuator or on the machine.

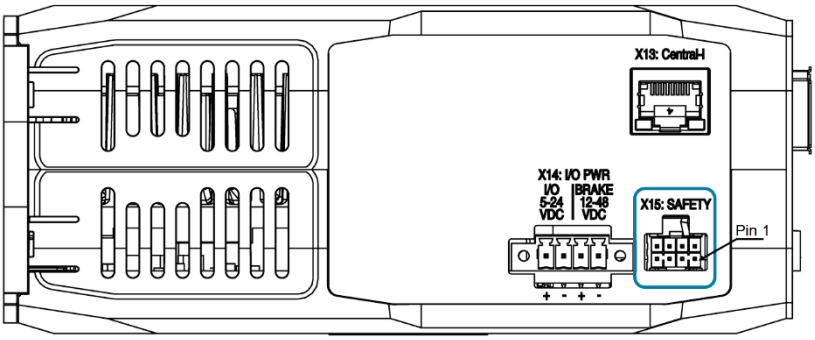

Figure 19. System I/O Connector

Connector X5: SYSTEM I/O

Pin #	Name	Software Representation	Description
1	N/A		
2	Digital_Input_14	DInPort.Bit(13)	Isolated digital input 14 (NPN or PNP, depending on connection of the common pin of this group)
3	Digital_Input_16	DInPort.Bit(15)	Isolated digital input 16 (NPN or PNP, depending on connection of the common pin of this group)
4	Digital_Output_5	DOutPort.Bit(4)	Isolated digital output 5, programmable sink or source
5	Digital_Output_6	DOutPort.Bit(5)	Isolated digital output 6, programmable sink or source
6	Analog_Input_2	AInPort[2]	Analog input 2, ±12V full scale
7	Analog_Input_Return_2		Analog input 2, return
8	Bi-Dir_Diff_IO_1+	DInPort.Bit(19) DOutPort.Bit(10)	Bi-directional differential I/O + BiDirConfig.bit0 = 0 for input BiDirConfig.bit0 = 1 for output
9	Bi-Dir_Diff_IO_1-		Bi-Directional differential I/O - BiDirConfig.bit0 = 0 for input BiDirConfig.bit0 = 1 for output
10	GND		Ground
11	Digital_Input_Common (13 to 16)		Common pin (power or return, depending on external connection) for digital input 5 to 9
12	Digital_Input_13	DInPort.Bit(12)	Isolated digital input 13 (NPN or PNP, depending on connection of the common pin of this group)
13	Digital_Input_15	DInPort.Bit(14)	Isolated digital input 15 (NPN or PNP, depending on connection of the common pin of this group)
14	Digital_Output_Common_Power (5 to 6)		Common power pin for isolated digital outputs 5 to 6
15	Digital_Output_Common_Return (5 to 6)		Common power return pin for isolated digital outputs 5 to 6
16	N/A		
17	N/A		
18	GND		Ground
19	IO_PWR		Internally connect to connector X14: I/O PWR pin 1
20	IO_PWR_Return		Internally connect to connector X14: I/O PWR pin 2

Connector manufacturer	3M
Mating connector part number	10120-3000PE + 10320-52A0-008 (Sunchu equivalent: SC-20-3)
Wiring	AWG 26, insulation rated for 100 V

Electrical Schematics for I/O Connections

The section describes the electrical I/O interfaces that are related to external devices. The number of I/Os available in the product depends on the model number or variant number. Refer to product catalog or consult your sales channel for more details.

Electrical Interfaces – Digital Input 1 to 3, 13 to 16 (2 isolated groups)

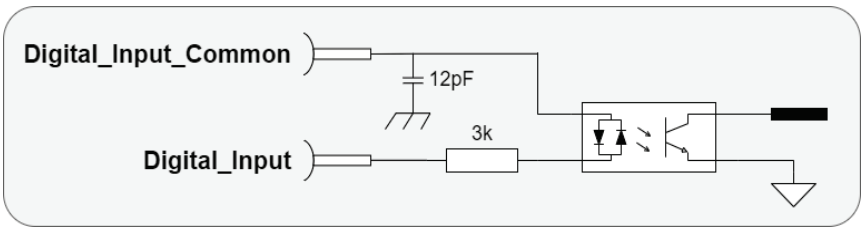

Figure 20. Electrical Interfaces – Digital Input 1 to 3, 13 to 16 (2 isolated groups)

Notes:

- The interface circuit is identical for all 8 digital inputs, except Digital_Input_4. Refer to the electrical interface of Digital_Input_4.
- Digital_Input_Common are grouped by digital inputs 1 to 3, and 13 to 16. Digital_Input_4 is not a part of these groups.
- Each group is fully isolated and independent of the other groups.
- Each group can be connected as NPN or PNP interfaces, depending on the wiring of the group's Digital_Input_Common pin. If the Digital_Input_Common pin is connected to power (between 5V and 24V), then the inputs of this group can be used with external NPN devices (external current sinking devices). If the Digital_Input_Common is connected to the GND of an external power supply, then the inputs of this group can be used with external PNP devices (external current sourcing devices).
- The input circuit of the opto-couplers includes two diodes. This enables use as NPN or PNP.
- One group can be wired to interface external NPN devices and another group can be wired to interface PNP devices. However, within a group, all interfaces (NPN or PNP) must be the same, as they are based on the connection of the group's Digital_Input_Common pin.

Electrical Interfaces – Digital Input 4

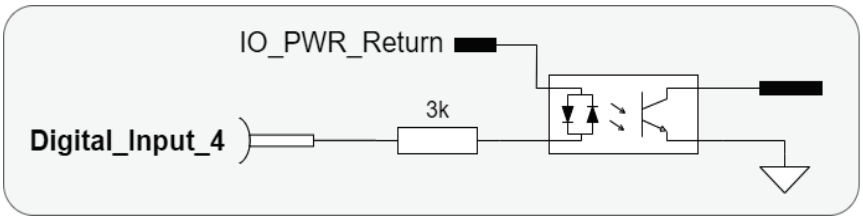

Figure 21. Electrical Interfaces – Digital Input 4

Note:

- Digital_Input_4 is internally pulled to IO_PWR_Return. It can only be connected as sinking input.

Electrical Interfaces – Digital Output 5 to 6

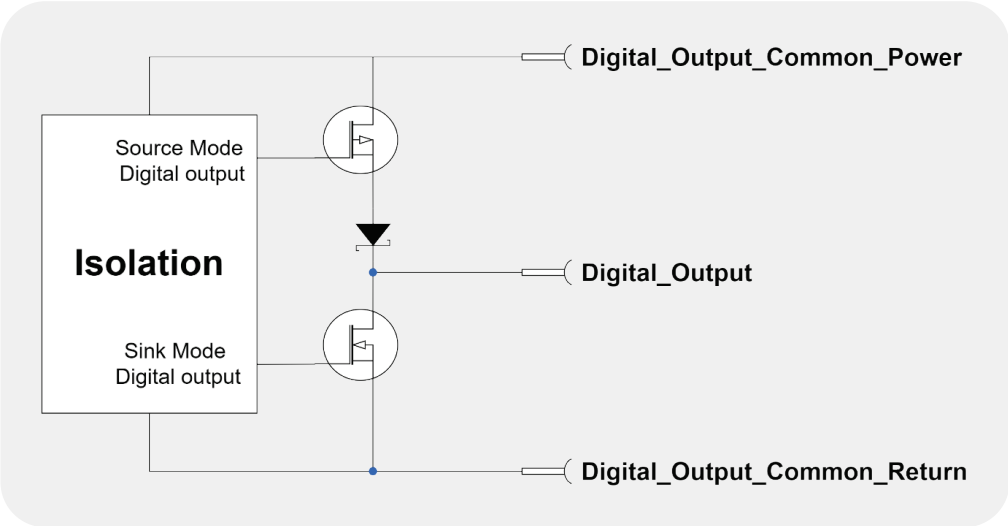

Figure 22. Electrical Interfaces – Digital Output 5 to 6

Notes:

- The interface circuit is identical for all outputs.
- Each output can be programmed (by software parameter) to act as a current sourcing output (up to 300mA), or as a current sinking output (up to 500mA).
- Digital_Output_Common_Power is supplied for both outputs 5 and 6.
- The outputs are designed for resistive loads. For inductive loads, an external flyback diode is required.
- Discrete outputs specifications:
  - Digital_Output_Common_Power voltage range is between 5V and 28V.
  - Maximal load current, per each output:

Sink mode, any Digital_Output_Common_Power voltage:	500 mA
Source mode, at 24V Digital_Output_Common_Power:	300 mA
Source mode, at 5V Digital_Output_Common_Power:	60 mA (see Note below)

Note – 5V Digital_Output_Common_Power source mode limitation.

When using 5V Digital_Output_Common_Power in source mode, higher current (but less than the absolute maximum value of 250 mA) can be driven. However, the output high voltage will drop significantly. To maintain output high voltage at > 4.5V, limit the current to 60 mA.

Electrical Interfaces – Bi-Directional Differential I/O

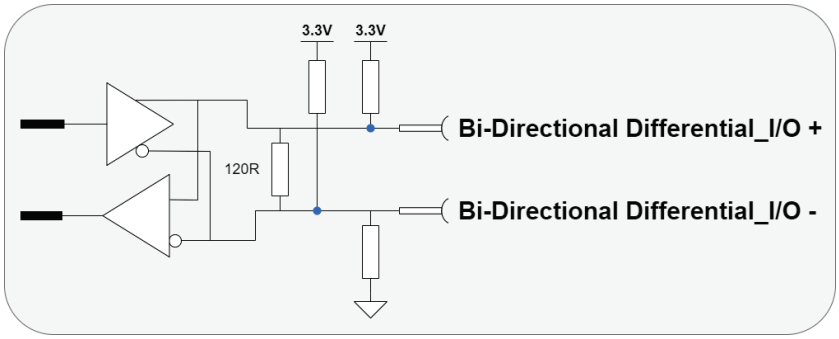

Figure 23. Electrical Interfaces – Bi-Directional Differential I/O

Notes:

- The bi-directional differential output is configurable by software to be differential output or differential input.
- Note that both + and - pins are pulled up to 3.3V.
- Note that there is a 120Ω termination resistor between the + and - pins.

Electrical Interfaces – Analog Input 2

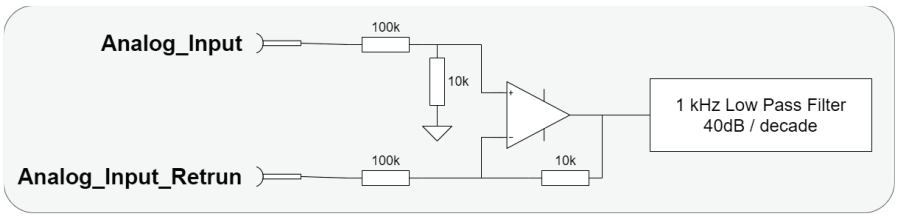

Figure 24. Electrical Interfaces – Analog Input 2

Notes:

- The electrical interfaces of all analog inputs are identical.
- The analog input range is -12V to +12V, and resolution is 12 bits.
- The analog input is designed for standard differential analog input, with a simple input circuit, having an input resistance of ~60 kΩ.
- For single-ended analog inputs, be sure to connect the return line to GND. Do not leave it unconnected.
- Input circuit bandwidth is 1 kHz, -40 dB/decade.
- The controller software provides the following parameters to control the analog input reading:
  - Filter
  - Offset
  - Deadband
  - Gain

4 Operation

4.1 Motor Configuration

This manual uses the product with a linear DC brushless motor as an example for illustration of the configuration and operation. For advanced configuration and operation, refer to the respective software manuals.

1. Connect the product to power supply, motor, encoder and other I/Os cable according to the electrical interface section. Ensure that the safety port is connected before any operation.

1. Open Agito PCSuite software. Select CFG in CONFIG below and setup the parameters as follows:

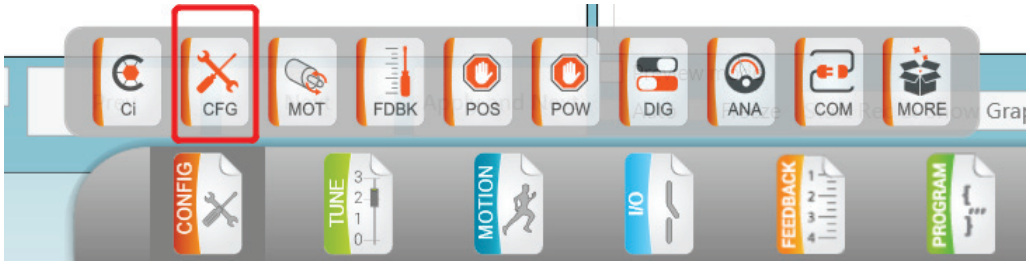

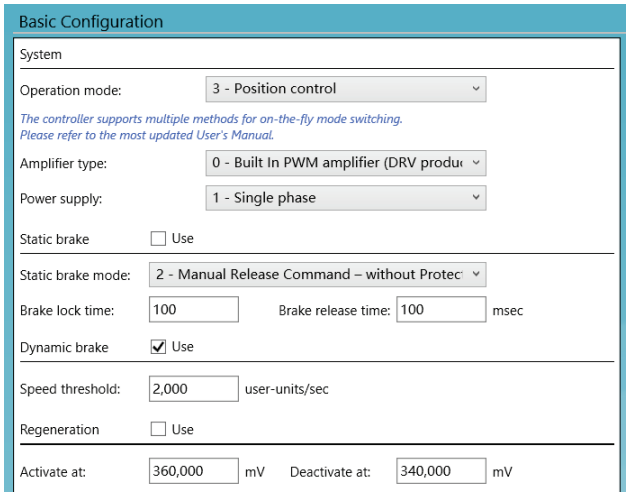

Figure 25. Operation Mode configuration

2. Click 'Next' and set the motor type and number of pole pairs according to the test motor：

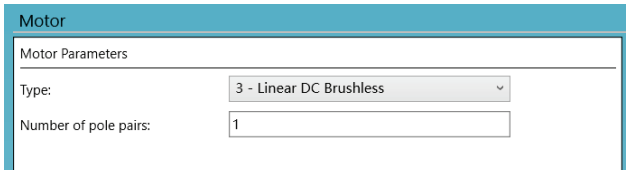

Figure 26. Select Motor Type

3. Click 'Next' to setup the position feedback parameters. The definition of 'Resolution' depends on the motor and encoder type. For rotary motor and rotary encoder, it is the number of encoder counts per mechanical revolution. For linear motor, it is the number of encoder counts per magnetic pitch (one pole-pair).

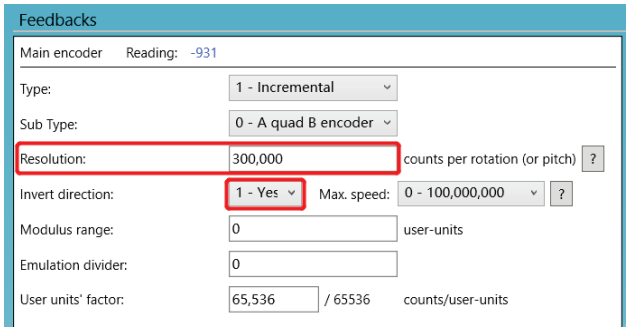

Figure 27. Feedback Parameters

Note: Value of 'Invert direction' affects commutation of the motor. The encoder must be moving in the positive direction during auto-phasing process.

4. Click 'Next' to setup position, velocity and motor stuck protection. Fill in the limits according to the application requirements.

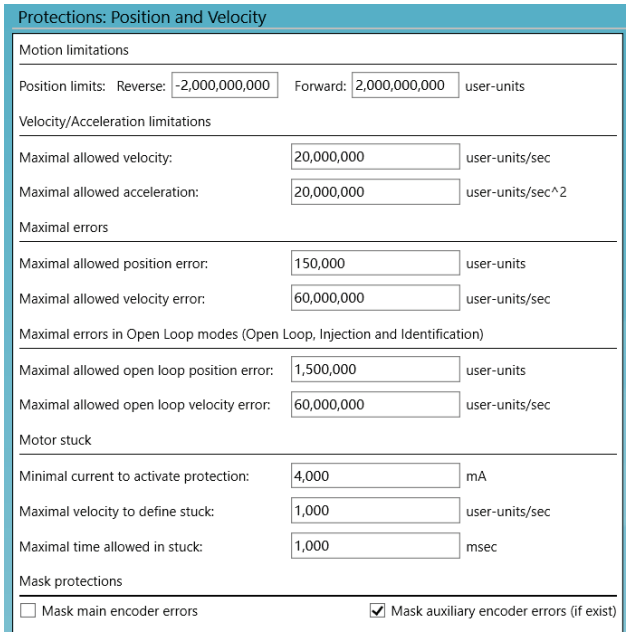

Figure 28. Position and Velocity Protection

5. Click 'Next" to configure current and voltage limits. It is important to refer to motor's specifications. The limits entered here must be within the motor operating limits to avoid damaging the motor.

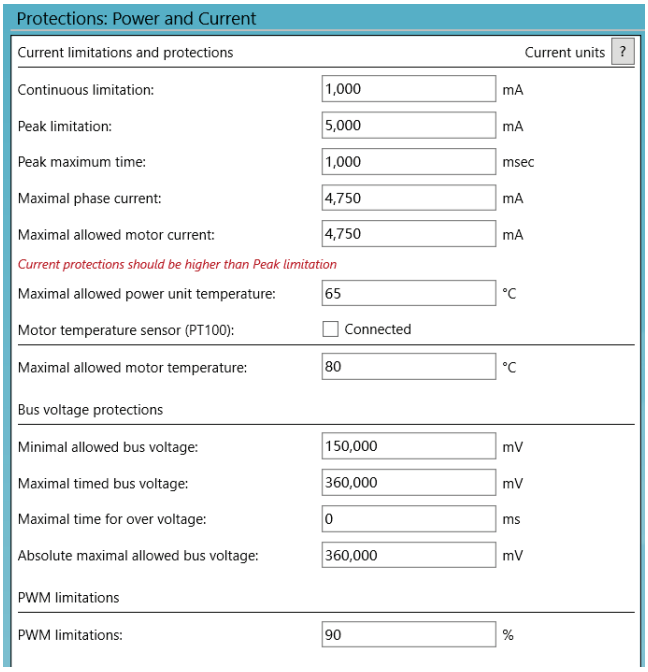

Figure 29. Current and Voltage Protection

4.2 Drive/Motor Overload Protection

The following methods are used to protect the AGA155 from overload:

- I^2T
- Motor stuck
- Motor temperature protection using a PT100 or PT1000.

4.2.1 I^2T Over Load protection

In a transient condition, the motor can sustain a certain amount of energy that exceeds the continuous limit. However, the more the current value exceeds the continuous current, the less time the current value can be sustained, and vice versa.

If the maximal energy level is surpassed, the maximal current is limited to the continuous current, instead of being limited to the peak current as usual.

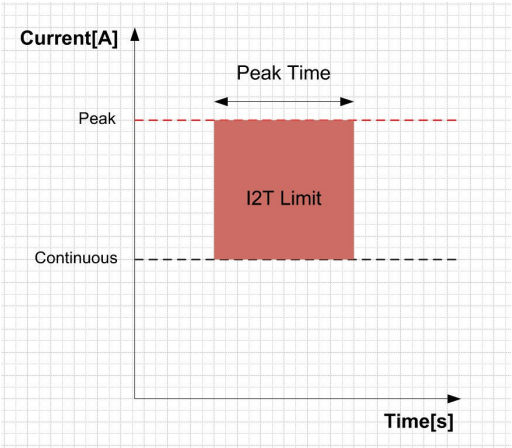

Figure 30. I^2T

In Agito PCSuite, the following parameters define the I^2T characteristics:

- Peak current
- Continuous current
- Peak time

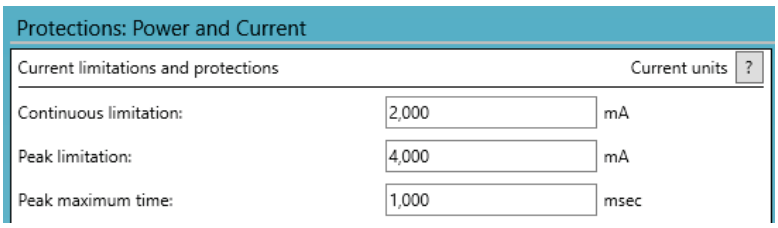

Figure 31. I^2T Settings

Note – The I2T algorithm does not support thermal memory protection or thermal memory during power loss.

On drive power-up, the algorithm does not consider the amount of energy supplied to the motor prior to power-up.

Note – The I2T algorithm does not consider motor speed. Therefore, the product does not support thermal speed sensitivity.

4.2.2 Motor Stuck

Motor stuck indicates whether or not the motor is in fact stuck. The condition is strongly dependent on the application.

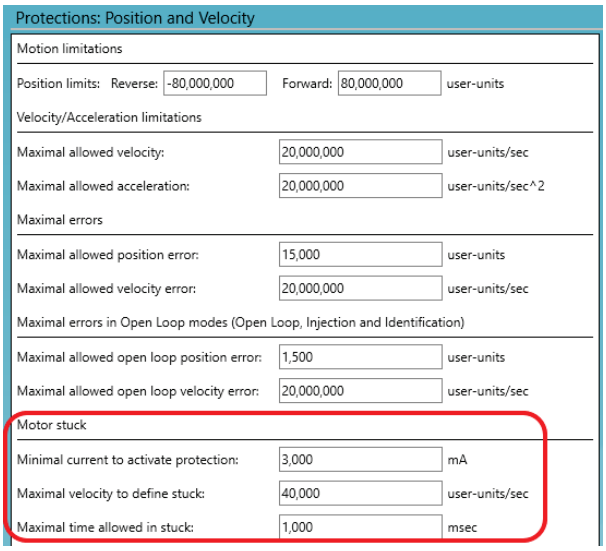

Figure 32. Motor Stuck Settings

The protection feature monitors and responds to a condition in which the amplifier is providing a certain amount of minimal current (StuckCurr), but the motor does not move at the minimal expected speed (StuckVel) for a certain amount of time (StuckTime). If this condition occurs, the motor will be shut off.

4.2.3 Motor Temperature Protection

If the motor temperature sensor option is selected, the AGA155 will monitor the PT100/1000 temperature sensor readings, and display warnings in the status window if the temperature is approaching the specified limit.

If the temperature exceeds the specified limit, the motor will be shut off.

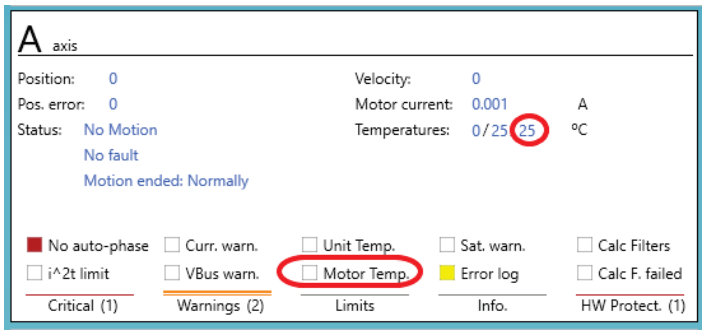

Figure 33. Axis Status

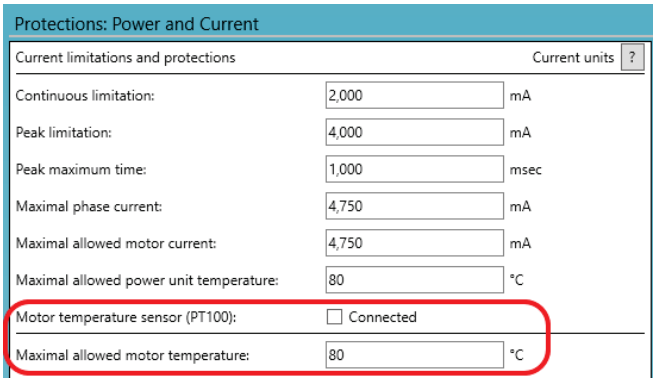

Figure 34. Motor Temperature Settings

4.3 Tuning

4.3.1 Commissioning

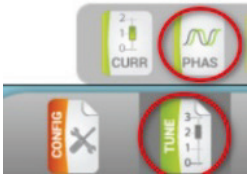

This step is required only for brushless motor. Select TUNE -> PHAS. in the tune option, configure the main encoder resolution. For Auto-Phasing mode, select “Automatic upon power on” if the application allows “shake and wake” upon power up. If not, select “Automatic upon MotorOn (if needed)” to “shake and wake” only when the motor is ready for motor on. Use “Jump to zero phase” for Auto-Phasing method for most reliable result. This method requires the longest search distance. If the stroke does not allow such search distance, select “Minimal Motion” method.

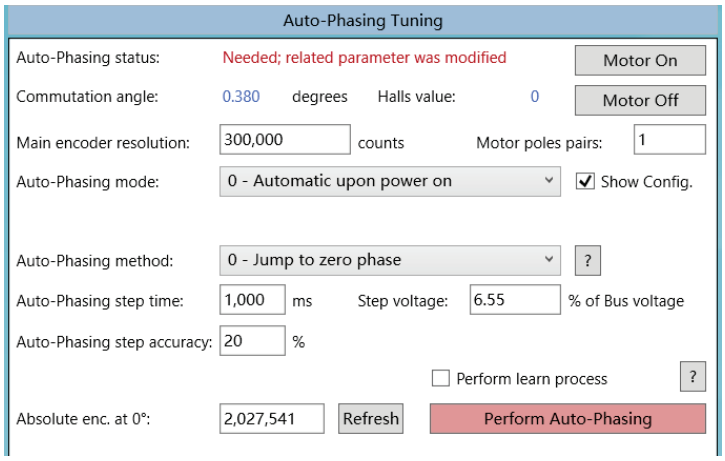

Figure 35. Auto-Phasing for Brushless motor

If the system does not allow any motion during power-on or motor-on, use Hall sensors for commutation phasing.

Connect Hall sensors to “HALLS” port and configure the first of the three inputs in the digital I/O page as “Hall A”.

- Use the “Jump to zero phase” method to establish the motor and hall phases, check the “Perform learn process” checkbox and click on “Perform Auto-Phasing”.
- After the auto-phasing is completed successfully, change the Auto-Phasing method to “Encoder with Halls/Encoder switching” and save all parameters to flash. After reset or power cycle of the controller, auto-phasing will be done by Hall sensors.

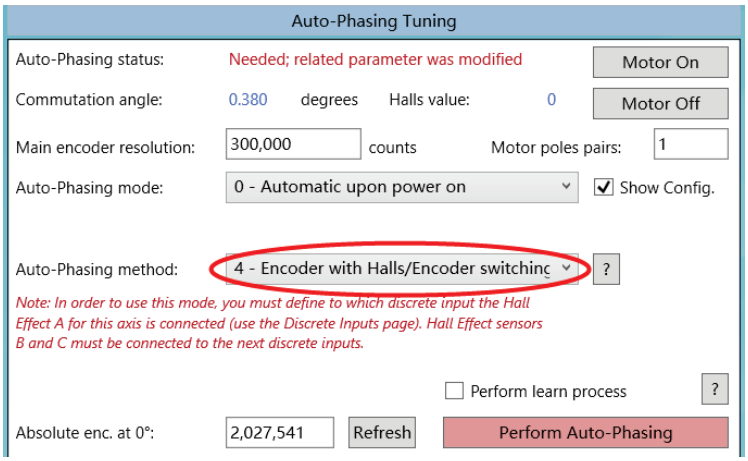

Figure 36. Using Hall Sensors to Avoid "Shake and Wake"

4.3.2 Current Loop Tuning

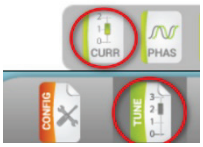

Select TUNE -> CURR. Enter motor's phase resistance and phase inductance according to motor's datasheet and enter the desired current loop bandwidth for this axis. Typically, 1000 Hz is suitable for most applications. Click "Calculate PI" to calculate the current loop gains. Check both checkboxes for auto data recording and user predefined data recording and click "Apply Current Command" button to test the current loop performance.

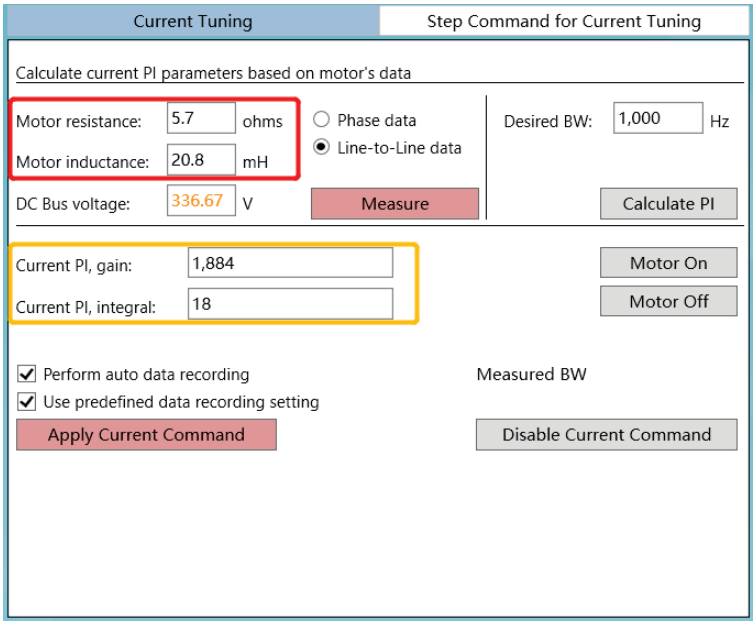

Figure 37. Current Loop Tuning

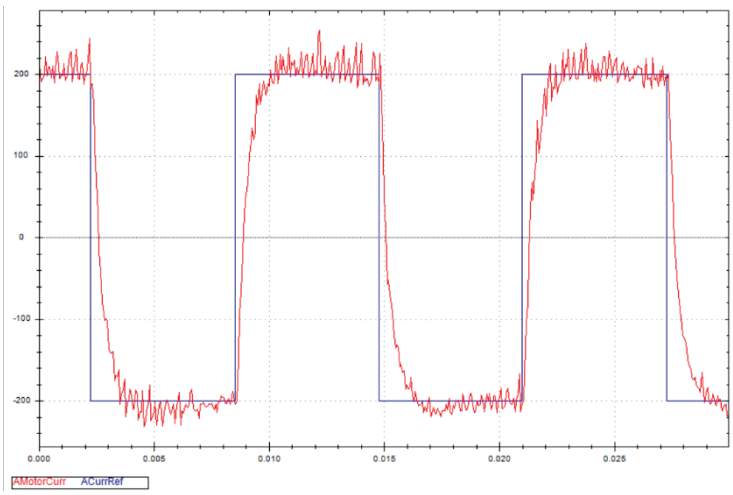

Figure 38 Typical Current Loop Performance

4.3.3 Auto Velocity and Position Loop Tuning

1. System Identification. Select TUNE -> IDEN. Click on “Begin Identification” button to perform system identification.

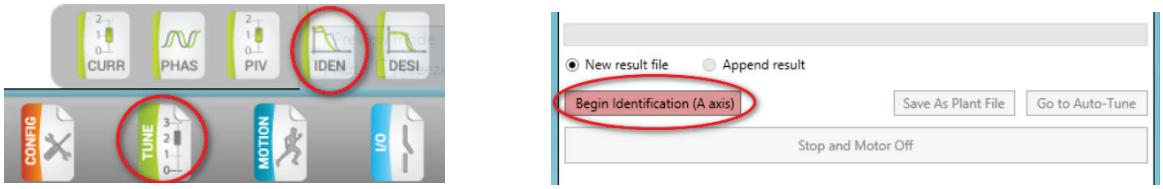

Figure 39. Begin System Identification

When the identification is completed successfully, the plant’s transfer function will be displayed, as shown in the following figure.

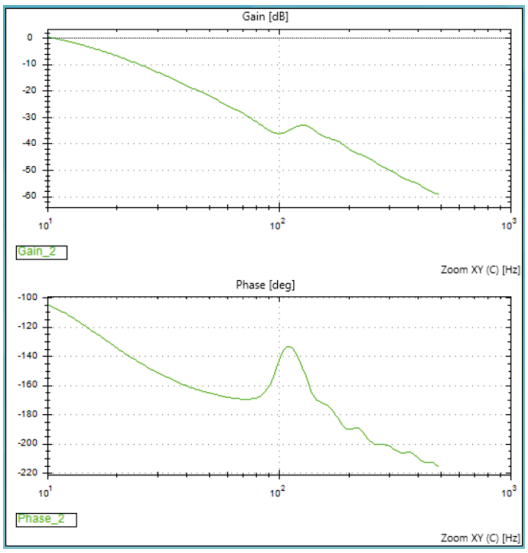

Figure 40. Typical Plant Transfer Function

2. Click on “Go to Auto-Tune” button. Alternatively, select TUNE-> DESI to open the Auto-Tuning (controller design) page.

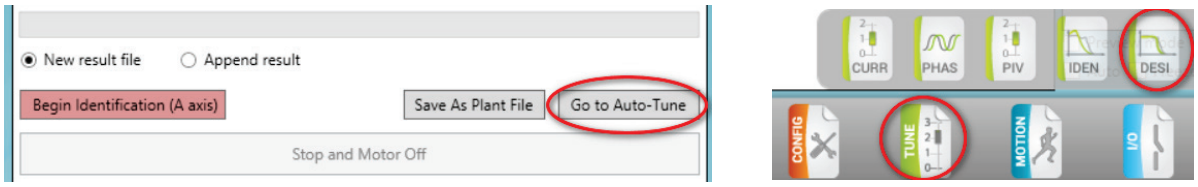

Figure 41. Go to Auto-Tuning page

3. Click on “Run Auto-Tune” to start Auto-Tuning. It will take a few seconds, or longer for more complex systems, to calculate the optimum PIV gains for this plant.

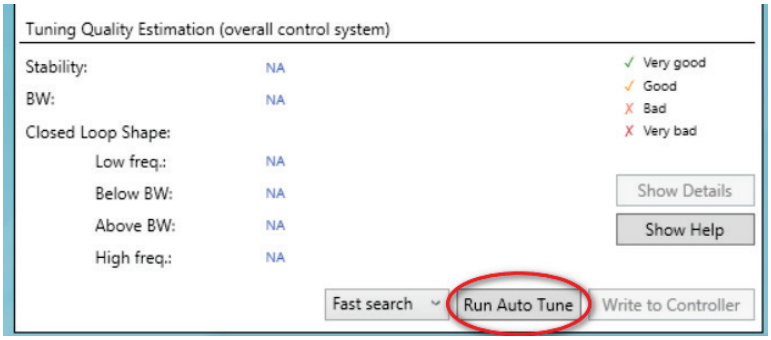

Figure 42. Start Auto-Tuning calculation

4. Once Auto-Tuning is completed, click 'Write to Controller' to download the calculated gains into the controller.

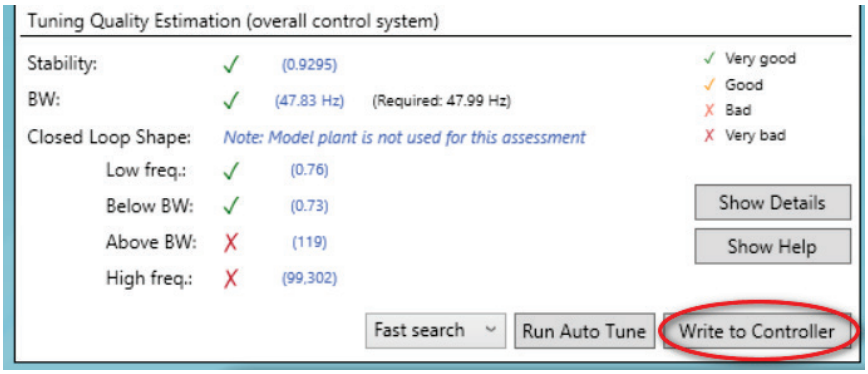

Figure 43. Download the parameters to the controller

5. Check the motion performance in the Motions Tab, setting the required motion profile and click “Go 1” or “Go 2” to move to Target 1 or Target 2. Record the motion data to analyze the motion performance in detail.

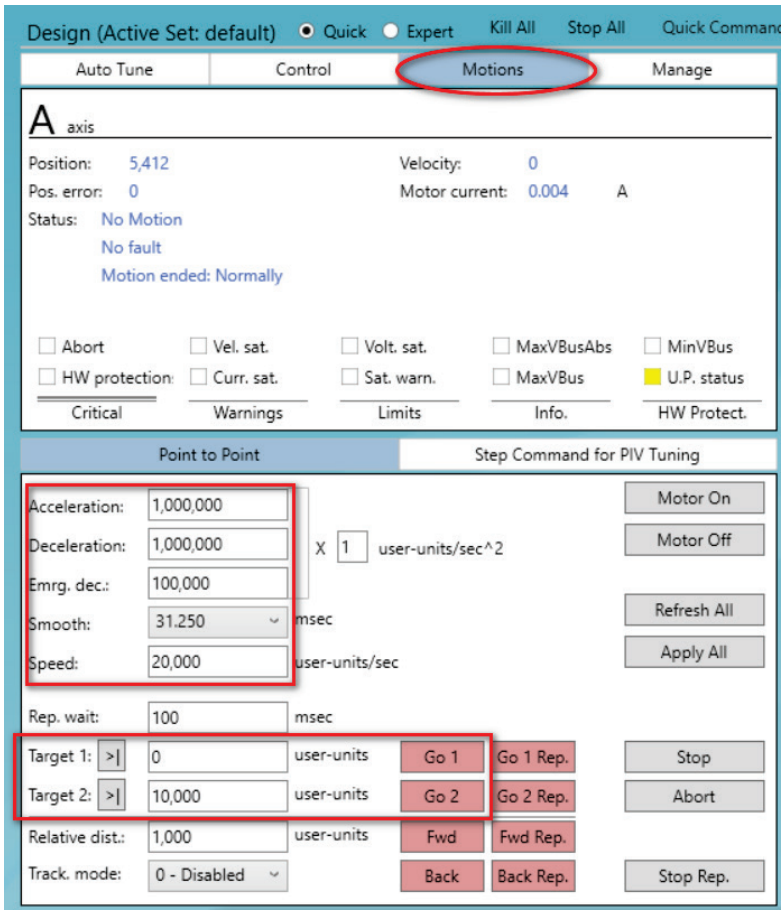

Figure 44. Testing Motion

4.3.4 Manual Velocity and Position Loop Tuning

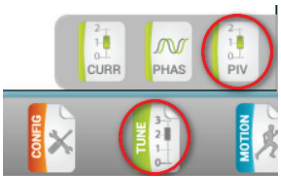

Select TUNE -> PIV. in the tune option, adjust the proportional ("PI, gain") and integral ("PI, integral") gains of velocity loop, click "Apply Vel Command" to check the performance.

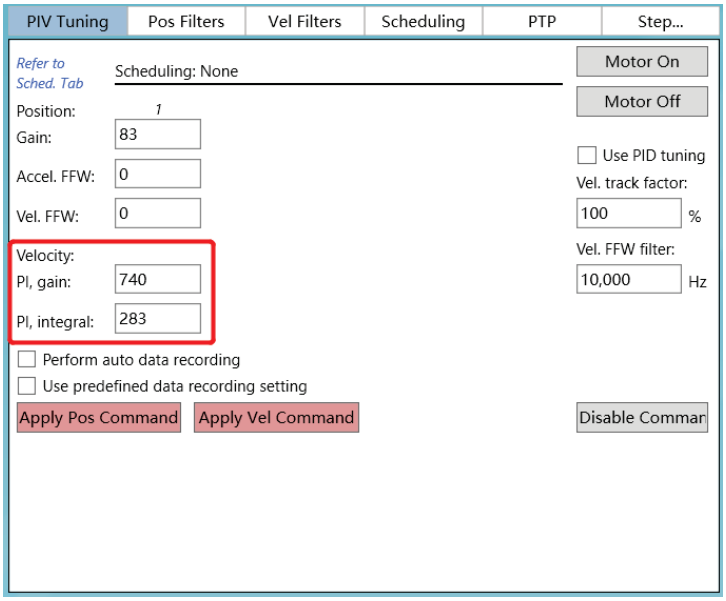

Figure 45. Manual Velocity Loop Tuning

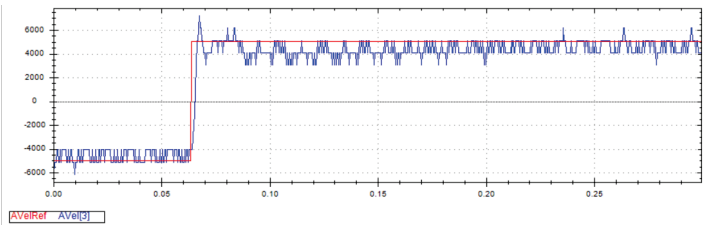

Figure 46. Typical Velocity Loop Performance

Similarly, adjust proportional gain of position loop. In addition, adjust acceleration and velocity feedforward to improve performance. Click 'Apply Pos Command' to check performance.

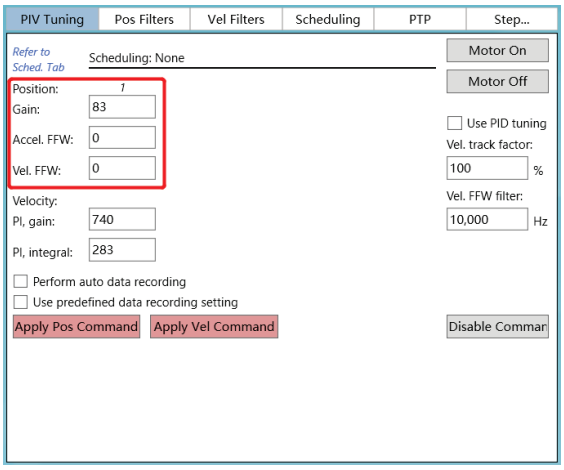

Figure 47. Position Loop Tuning

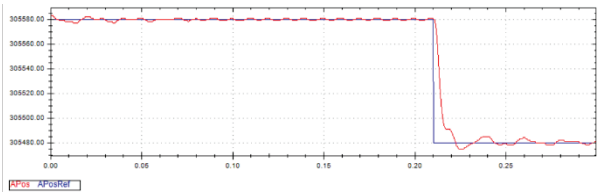

Figure 48. Typical Position Loop performance

Repeat the configuration and tuning steps for all the axes connected to the product.

Finally, test the motion according to the required motion profile, as in Figure 44. Testing Motion.

5 Maintenance and Servicing

Troubleshooting

Condition	Potential Cause	Possible Resolution
Power is On but no LED light	Power connector is loose	Check power connector, measure power supply voltage using a voltmeter.
Motor is oscillating or out of control (free wheel)	The position feedback sensor (encoder) is faulty or disconnected	Check wiring.
	Position feedback sensor is configured in wrong direction	Go to Agito PCSuite's CONFIG -> FDBK page, toggle the "Invert direction" setting.
	Encoder signal is interfered by EMI noise in the system, resulting in lost counts or incorrect position feedback	Verify if the encoder signal is drifting even when the motor is physically locked or not moving. Check electrical grounding, shielding and PE in the system to ensure there are no ground-loop in the system. Set EncFilt from Agito PCSuite's CONFIG -> FDBK page to a frequency setting that is just above the required motion speed.
	Control loops' gains are too high	Go to Agito PCSuite's Tune page, select CURR and/or PIV page to reduce the gains to half. If the situation improved, redo tuning for the axis.
	Velocity or Acceleration command is set too high	Reduce the acceleration, deceleration, smooth and speed setting.
	Noise introduced in calculation of velocity from position feedback	Add a software low pass filter from Agito PCSuite's TUNE -> PIV, Velocity Filters tab.
	Mechanical resonance.	Add a software low pass filter from Agito PCSuite's TUNE -> PIV, Velocity Filters tab. Do advanced auto tuning to allow Agito PCSuite identify and apply a suitable filter. Perform TUNE->IDEN and TUNE -> DESI (Expert -> Expert Tune mode for best result).
Cannot achieve the required speed	Acceleration and/or deceleration and/or speed is set too low, or smooth is set too high.	Adjust acceleration, deceleration and smooth settings.
	Current and voltage limits are set too low	Check current limits are according to motor's datasheet and maxPWM, under CONFIG->POW page, is set to between 90% and 95%
	Improper control loops gains	Re-tune the motor
	The load inertia or friction is too high for the motor	Check motor and driver sizing for this axis to ensure the motor force, current and voltage of power supply is sufficient to achieve the motion.

	Auto-phasing is inaccurate	Check that hall sensors and encoder signal are functional and not interfered by EMI in the system. And redo auto-phasing.
Motor does not respond to a command	The axis is stopped by FLS/ RLS position limit sensor or limited by software position and velocity limits.	Check if FLS and RLS of the motor is active. Or it could be a wrong setting where another sensor is configured wrongly as the FLS or RLS of this motor. Check software position limits and velocity limits at Agito PCSuite's CONFIG -> POS page. If the FLS or RLS signal is active when the digital input is changed, the FLS or RLS status will remain ON. In this case, set the digital input to FLS or RLS, manually move the motor away from the sensor before change the digital input function. Alternatively, reset the controller or power cycle the controller.
	The axis is configured in a wrong operating mode or function, e.g. as a slave axis or another master.	Check all motion related configurations.
	Motor connector is loose.	Check motor power connection
	The motor is faulty.	Measure motor's resistance and inductance at Agito PCSuite's TUNE -> CURR page to check if the resistance and inductance values are close to the motor specification.
	If this is an actuator with ballscrew, timing belt or other transmission, the coupling or other mechanical part may be loose.	Check all mechanical transmission parts and mechanism.
	Motor brake is engaged	Check brake wiring and power supply