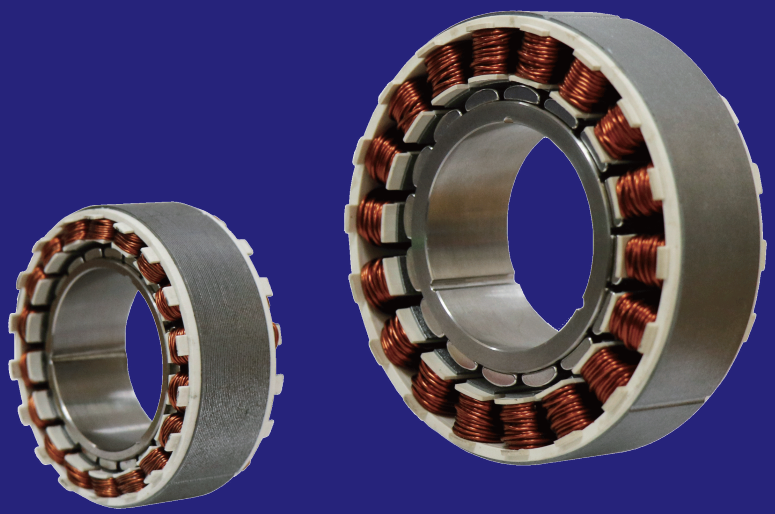

ADR-T SERIES

- Thin and compact design
- Direct drive and brushless motor
- High torque density
- Low cogging torque
- Optional for low speed and high speed windings
- High cost performance

Akribis systems

ADR50-T-14

ADR50-T-14				
Performance Parameters	**Symbol**	**Unit**	**Series**	**Parallel**
Continuous Torque (NC) @100°C❶	T_{cn}	Nm	0.48	0.48
Peak Torque	T_{pk}	Nm	1.44	1.44
Torque Constant ±10%	K_t	Nm/Arms	0.21	0.11
Back EMF Constant ±10%	K_e	Vpeak/rpm	0.02	0.01
Motor Constant @25°C	K_m	Nm/Sqrt(W)	0.09	0.09
Resistance (L-L) 25°C ±10%❷	R_{25}	Ω	3.44	0.86
Inductance (L-L) ±20%❸	L	mH	1.20	0.30
Electrical Time Constant	τ_e	ms	0.35	0.35
Continuous Current (NC) @100°C❶	I_{cn}	Arms	2.3	4.5
Peak Current	I_{pk}	Arms	7.9	15.8
Continuous Power Dissipation (NC) @100°C❶	P_{cn}	W	37	37
Max. Coil Temperature	t_{max}	°C	130	130
Thermal Dissipation Constant (NC)❶	K_{thn}	W/°C	0.35	0.35
Max. Bus Voltage	U_{bus}	Vdc	48	48
Pole Number	2_P	-	20	20
Max.Speed❹	Ω_{max}	rpm	2000	4000
Mechanical Parameters				
Overall Mass (NC)	m_n	kg	0.12	0.12
Rotor Inertia	J_r	kg·m²	1.12E-05	1.12E-05
Other Information				
Insulation Class		Class B (130°C)		
Protection Grade		IP00		
Compliance with Global Standards		RoHS		
Ambient Temperature	Operation	0°C to 40°C (non-freezing)		
	Storage	-15°C to 70°C (non-freezing)		
Ambient Humidity	Operation	10%RH to 80%RH (non-condensing)		
	Storage	10%RH to 90%RH (non-condensing)		
Recommended Ambience		Indoor (no direct sunlight); No corrosive gas, inflammable gas, oil mist or dust.		

❶ Measurement is taken at ambient temperature 25°C. Value depends on the thermal environment.
❷ Resistance is measured by DC current with standard 0.5 m cable.
❸ Inductance is measured by current frequency of 1 kHz.
❹ The value is based on ABI optical SIN/COS encoder (4096x interpolation) under max. bus voltage.
The contents of datasheet are subject to change without prior notice.

Dimension

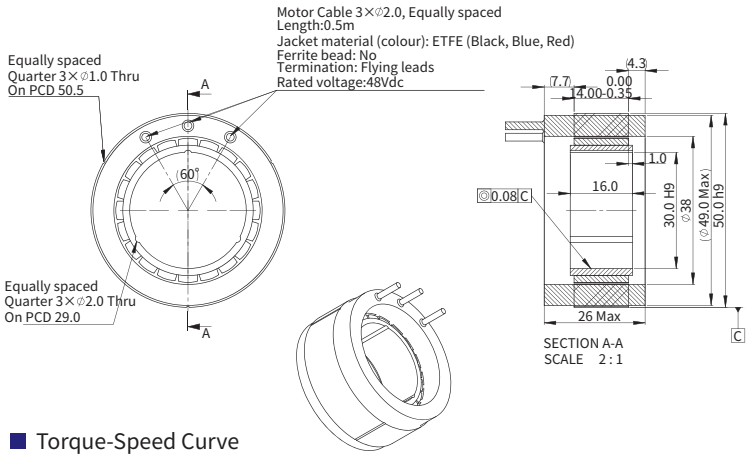

Torque-Speed Curve

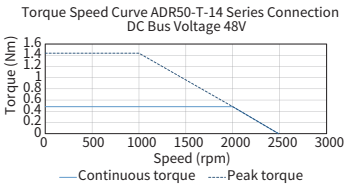

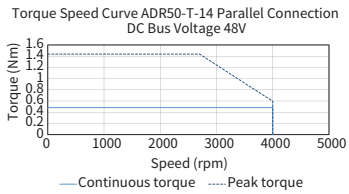

ADR80-T-20

ADR80-T-20				
Performance Parameters	**Symbol**	**Unit**	**Series**	**Parallel**
Continuous Torque (NC) @100°C❶	T_{cn}	Nm	1.41	1.41
Peak Torque	T_{pk}	Nm	4.22	4.22
Torque Constant ±10%	K_t	Nm/Arms	0.32	0.16
Back EMF Constant ±10%	K_e	Vpeak/rpm	0.03	0.01
Motor Constant @25°C	K_m	Nm/Sqrt(W)	0.28	0.28
Resistance (L-L) 25°C ±10%❷	R_{25}	Ω	0.90	0.23
Inductance (L-L) ±20%❸	L	mH	1.00	0.25
Electrical Time Constant	τ_e	ms	1.11	1.11
Continuous Current (NC) @100°C❶	I_{cn}	Arms	4.4	8.8
Peak Current	I_{pk}	Arms	15.2	30.4
Continuous Power Dissipation (NC) @100°C❶	P_{cn}	W	34	34
Max. Coil Temperature	t_{max}	°C	130	130
Thermal Dissipation Constant (NC)❶	K_{thn}	W/°C	0.45	0.45
Max. Bus Voltage	U_{bus}	Vdc	48	48
Pole Number	2_P	-	16	16
Max.Speed❹	Ω_{max}	rpm	1500	3000
Mechanical Parameters				
Overall Mass (NC)	m_n	kg	0.58	0.58
Rotor Inertia	J_r	kg·m²	4.80E-05	4.80E-05
Other Information				
Insulation Class		Class B (130°C)		
Protection Grade		IP00		
Compliance with Global Standards		RoHS		
Ambient Temperature	Operation	0°C to 40°C (non-freezing)		
	Storage	-15°C to 70°C (non-freezing)		
Ambient Humidity	Operation	10%RH to 80%RH (non-condensing)		
	Storage	10%RH to 90%RH (non-condensing)		
Recommended Ambience		Indoor (no direct sunlight); No corrosive gas, inflammable gas, oil mist or dust.		

❶ Measurement is taken at ambient temperature 25°C. Value depends on the thermal environment.
❷ Resistance is measured by DC current with standard 0.5 m cable.
❸ Inductance is measured by current frequency of 1 kHz.
❹ The value is based on ABI optical SIN/COS encoder (4096x interpolation) under max. bus voltage.
The contents of datasheet are subject to change without prior notice.

Dimension

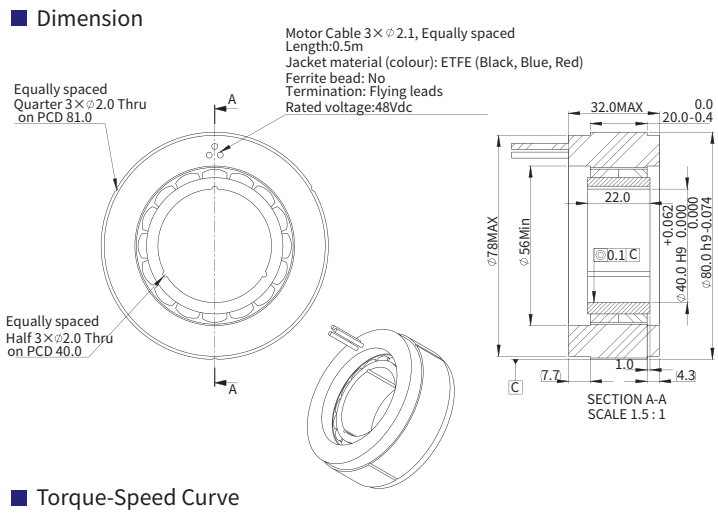

Torque-Speed Curve

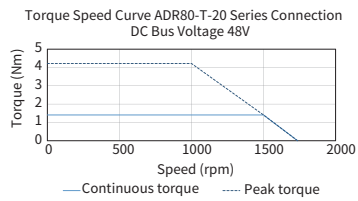

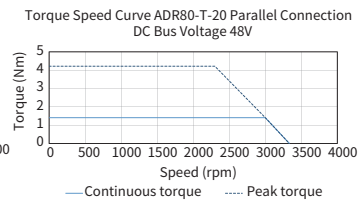

Motor Cable Connection

MOTOR CABLE

DESCRIPTION	COLOR
M1	BLACK
M2	BLUE
M3	RED

MOTOR POWER CABLE

MINIMUM BENDING RADIUS
MOIVING: CABLE DIAMETER×8
FIXED: CABLE DIAMETER×5

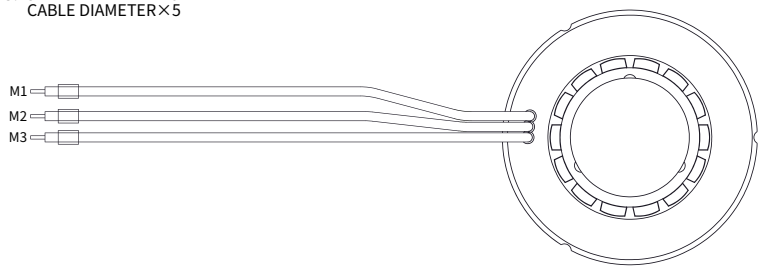

Part Numbering

ADR50-T-14-S-0.5

Motor:
ADR50

Model:
T-14

Cable Length:
0.5

Winding:
S = Series / P = Parallel

Akribis Worldwide Offices and Distribution Network

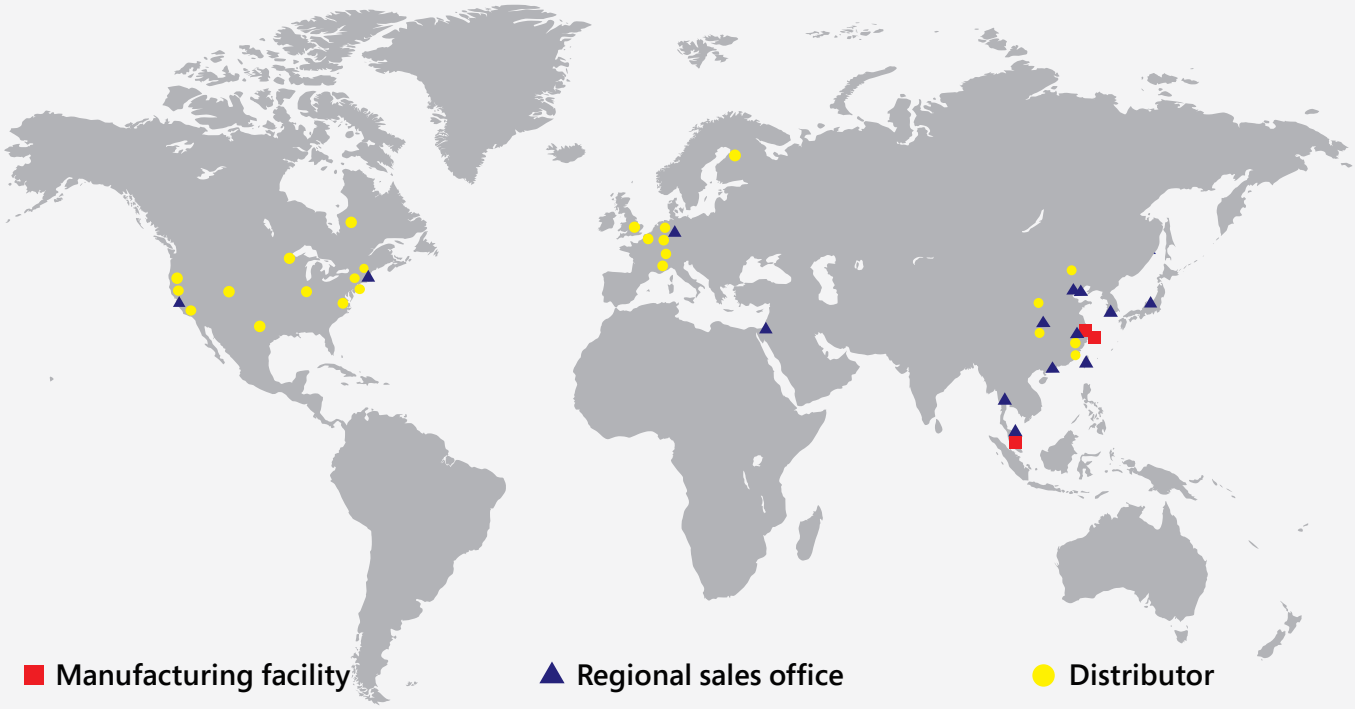

Manufacturing facilities

Akribis Systems Pte Ltd — HQ
5012 Techplace II Ang Mo Kio Ave 5
#01-05 Singapore 569876
Tel: (65) 6484 3357

Akribis Systems (Shanghai) Co., Ltd
A2, No.6999, Chuan Sha Rd, Pudong
New Area, Shanghai, 201202, China
Tel: (86) 21 5859 5800

Akribis Systems (Nantong) Co., Ltd
Floor 2, Building 7, Boding Machinery
Industrial Park, Xingyuan Road, Tongzhou,
Nantong , Jiangsu Province, China
Tel: (86) 0513 8655 1066

Branches

Akribis Systems (Beijing) Co., Ltd
No.804, Building 7 Bao Li Da Hui,
No.156 Xinhua North Street,
Tongzhou District, Beijing, China
Tel: (86) 010 5686 5157

Akribis Systems GmbH
Am Weichselgarten 19a,
Erlangen, D-91058, Germany
Tel: (49) 9131 81179 0

Agito Akribis Systems Ltd.
6 Yad-Harutsim St., Industrial Zone,
Kfar-Saba, 4464103, Israel
Tel: (972) 5430 0036 5

Akribis Systems Japan Co., Ltd
Excellent TR 1F, 3-43-9,
Musashidai Fucyu-city Tokyo,
183-0042, Japan
Tel: (81) 42 359 4295

Akribis Korea Co., Ltd
4th floor, 81, Bupyeongbuk-ro,
Bupyeong-gu, Incheon, 21302,
Rep. of Korea
Tel: (82) 32 710 5033

Akribis Systems Sdn Bhd
No.1, Jalan KPB 16, Balakong Industrial
Park, 43300 Seri Kembangan, Selangor
Darul Ehsan, Malaysia
Tel: (60) 3896 4400 8

Taiwan Akribis Systems Co., Ltd
9/f, 985-8, Chunri Road,
Taoyuan District, Taoyuan,
Taiwan
Tel: (886) 3 3571868

Akribis Systems Pte Ltd
No. 56/2 Chanothai, Khlong 3,
Khlong Luang Road, Khlong Luan,
Pathum thani, 12120, Thailand
Tel: (66) 8515 10088

Akribis Systems Inc. (East)
100 Cummings Center Suite 212-D
Beverly, MA 01915, USA
Tel: (1) 508 934 7480

Akribis Systems Inc. (West)
780 Montague Expressway Suite
508 San Jose, CA 95131, USA
Tel: (1) 408 913 1300

Akribis Systems (Shanghai) Co., Ltd (Shenzhen)
1 / F, Building B, Guanlan Honglianying Industrial
Park, Longhua New Area, Shenzhen, China
Tel: (86) 0755 2377 7203

cust-service@akribis-sys.com
www.akribis-sys.com

Copyright Notice
© 2020 Akribis Systems Pte Ltd.
All rights reserved. This work may not be reproduced or transmitted in any form or by any means without written permission of Akribis Systems.

Disclaimer
This product documentation was accurate and reliable at the time of its release. Akribis Systems reserves the right to change the specifications of the product described in this manual without notice at any time.