Central-I Family

CiG1-ADP02-1A-01-00

Hardware User's Manual

Revision control table			
Version	Description	Date	
1.0	Initial (based on Hardware Manual of previous hardware versions)	Sep 5,2016	Yiqing
1.1	Addition and Corrections	Mar 29,2017	Yiqing
1.2	Adding sample for connection with external driver	May 16,2017	Yiqing
1.3	IO application	Sep,19,2018	LF

Table of contents

Scope 4

PRODUCT STRUCTURE 4

CIGI-ADP02-1A-01-XX 4

SYSTEM STRUCTURE 5

Overview 5

Products' variants 5

ADAPTER – CIGI-ADP02-1A-01-00 6

LOGIC POWER CONNECTOR 6

Adapter – J1 – Input Logic Power 6

ADAPTER BOARD CONNECTORS 7

Adapter – J2 – Central-i 7

Adapter – J3 – External Servo Drive 9

Adapter – J4 – Input for limit switches 14

Environmental conditions 15

References 16

Scope

This manual describes hardware interfaces of the CIGI-ADP02-1A-01-00. [1]

Product description	Part numbers
Adapter	CIGI-ADP02-1A-01-00

The –XX defines a product's hardware variant, as describes below.

Product structure

CIGI-ADP02-1A-01-XX

The following pictures show the overall structure CIGI-ADP02-1A-01-XX Amplifier, that the XX implies all variant types. All variants of this product type will use the same hardware that can be depicted in Figure 1.

Figure 1: CiG1-ADP02-1A-01-XX Board Overview

System Structure

Overview

The following section will discuss all the hardware functionality that is supported by this product.

Products' variants

The –XX at the end of the product's part number (see label on the product) defines the product's variant. This product belongs to a subset of families from the Central-I range. It is meant to act as a slave unit to the CIG1-MAS controller variants communicating via the Central-I protocol. Detailed information regarding the part numbering for Central-I products see [1]

For the adapter:

CIGI-ADP01-1A-01-00:	Input Logic Power,9V~36V, up to 1A All hardware interfaces are assembled and included. Special amplifier port and I/O port Provide external 24V user power, up to 3A
CIGI-ADP02-1A-01-00:	Input Logic Power,9V~36V, Up to 1A All hardware interfaces are assembled and included. Simpler design with external drive port Give special power for limit switches.

ADAPTER – CIGI-ADP02-1A-01-00

This document provides a detailed description of the interface of the adapter.

Logic power connector

This chapter describes the adapter's logic power connector.

Adapter – J1 – Input Logic Power

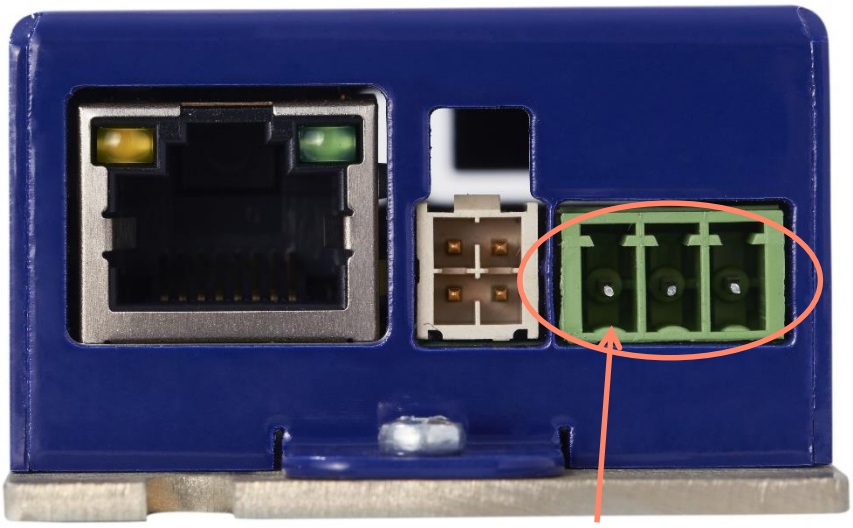

Figure 2

Description: The graph above is about the logic power port on the adapter board.
Manufacturer: DEGSON (Phoenix compatible)
P/N (product side): 15EDGRC3.504P1400AH
Pitch: 3.5mm

Pin #	Name	Type	Description
1	Isolated IO Power	PWR - IN	9vDC-36vDC
2	GND	PWR -IN	Logic power ground
3	GND_EARTH	PWR -IN	Earth ground connection

The adapter includes a built-in protection to avoid damage in case of inversed polarity at the input power. J1 is used to supply power to the overall unit. The input voltage is directly connected to the adapter to power bridge to generate internal logic power in order to power the adapter.

Adapter board connectors

The chapter describes the connectors and interfaces of the adapter board.

Adapter – J2 – Central-i

J2 is used to realize the communication between the adapter board and other central-I serial devices.

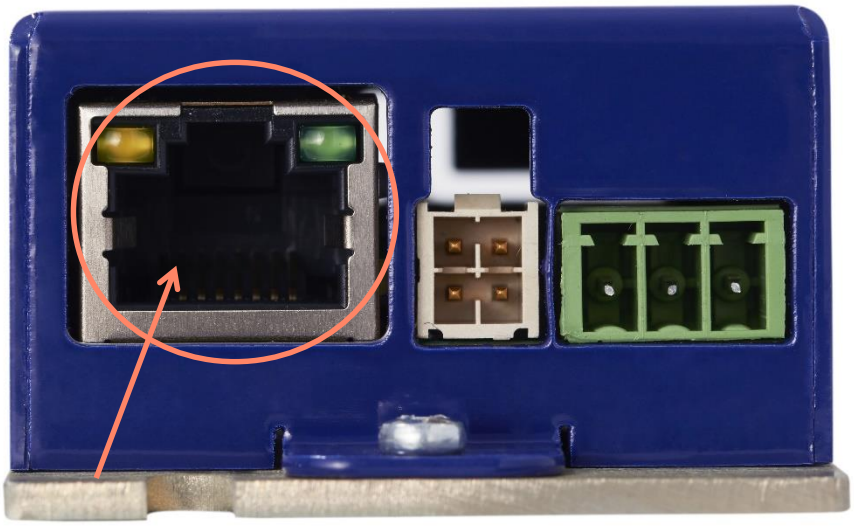

Figure 3 Cnetral-I Coummunication Port

Description: CONNECTOR, RJ45, PLUG, 8P8C, 1 PORT
Manufacturer: TE
P/N (product side): 5-554720-2
Cable: CAT5

Pin #	Name	Type	Description
1	CI_DATA0p	IN/OUT	Data0 positive input
2	CI_DATA0n	IN/OUT	Data0 negative input
3	CI_DATA1p	IN/OUT	Data1 positive input
4	NA	IN	Not connected

Pin #	Name	Type	Description
5	NA	IN	Not connected
6	CI_DATA1n	IN/OUT	Data1 negative input
7	CI_5V	PWR - IN	5V IO Power
8	CI_GND	PWR -IN	5V IO Power Return

This connection can be used for the connection with the PC.

Electrical interface: Central-i

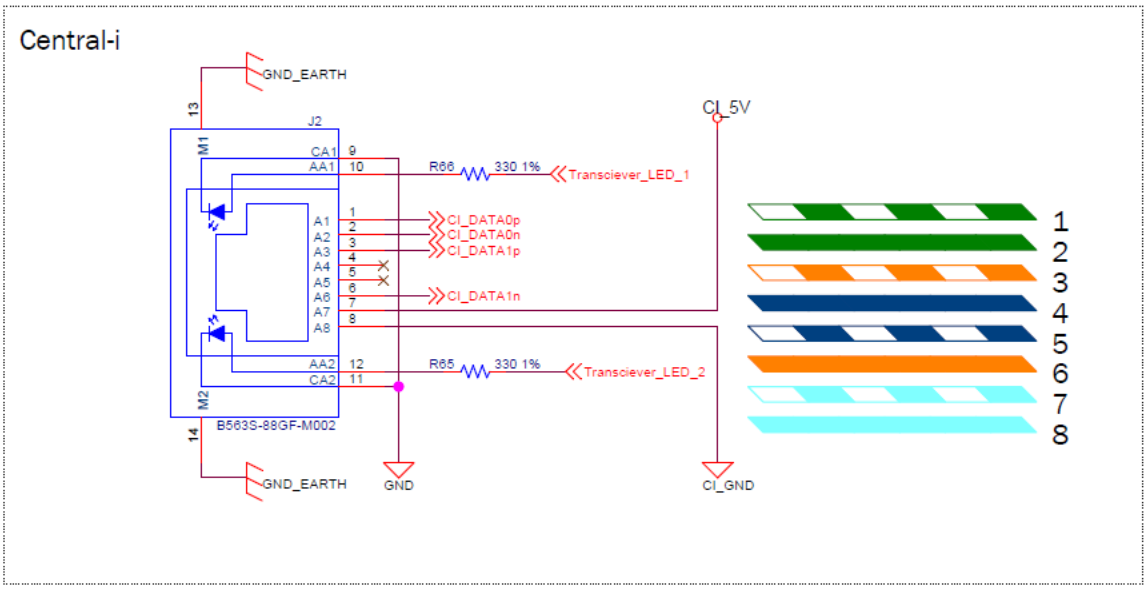

Adapter – J3 – External Servo Drive

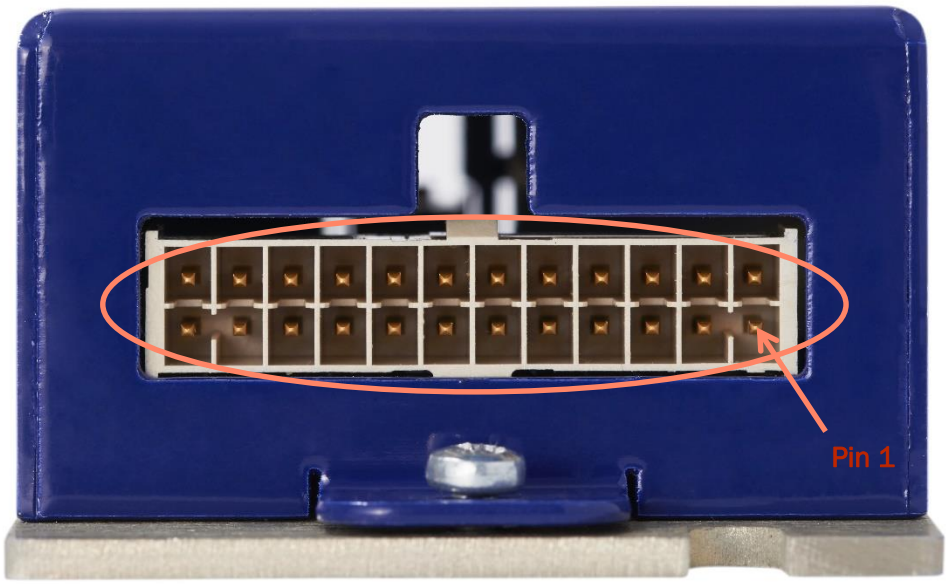

Figure 4 External Driver Port

Description: The graph above is about the external servo drive port on the adapter board.
Manufacturer: SAMTEC
P/N (product side): IPL1-112-01-L-D-RA-K
Mating Type: IPD1-12-D-K
Crimp P/N: CC79L-2630-01-L

Note: This port can be used for connection between the adapter and other external drivers.

Pin #	Name	Type	Description
1	GND	OUT	Common Ground
2	VIN_9V-36V	PWR-OUT	9V-36V Power out
3	A_Encoder_4+	IN	Encoder input 4, positive pin
4	A_Encoder_3+	IN	Encoder input 3, positive pin
5	A_Encoder_2+	IN	Encoder input 2, positive pin
6	Digital_Output3	OUT	3rd isolated output, SW: DOutPort (bit 2). Programmable sink or source
7	Digital_Output1	OUT	1st isolated output, SW: DOutPort (bit 0). Programmable sink or source

Pin #	Name	Type	Description
8	OC_Input3	IN	3rd isolated input, SW: DInPort (bit 2). NPN depending on connection of the common pin of this group
9	OC_Input1	IN	1st isolated input, SW: DInPort (bit 0). NPN depending on connection of the common pin of this group
10	Analog_In1	IN	Analog Input 1
11	NA	IN	Not Connected
12	Analog_Out1	OUT	Analog Output 1
13	GND_EARTH	PWR	Ground_Earth Connection
14	GND	PWR	Common Ground
15	A_Encoder_4-	IN	Encoder input 4, negative pin
16	A_Encoder_3-	IN	Encoder input 3, negative pin
17	A_Encoder_2-	IN	Encoder input 2, negative pin
18	Digital_Output4	OUT	4th isolated output, SW: DOutPort (bit 3). Programmable sink or source
19	Digital_Output2	OUT	2nd isolated output, SW: DOutPort (bit 1). Programmable sink or source
20	OC_Input4	IN	4th isolated input, SW: DInPort (bit 3). NPN depending on connection of the common pin of this group
21	OC_Input2	IN	2nd isolated input, SW: DInPort (bit 1). NPN depending on connection of the common pin of this group
22	GND	PWR	Common Ground
23	NA	IN	Not Connected
24	GND	PWR	Common Ground

Electrical interfaces – Discrete, Isolated, inputs:

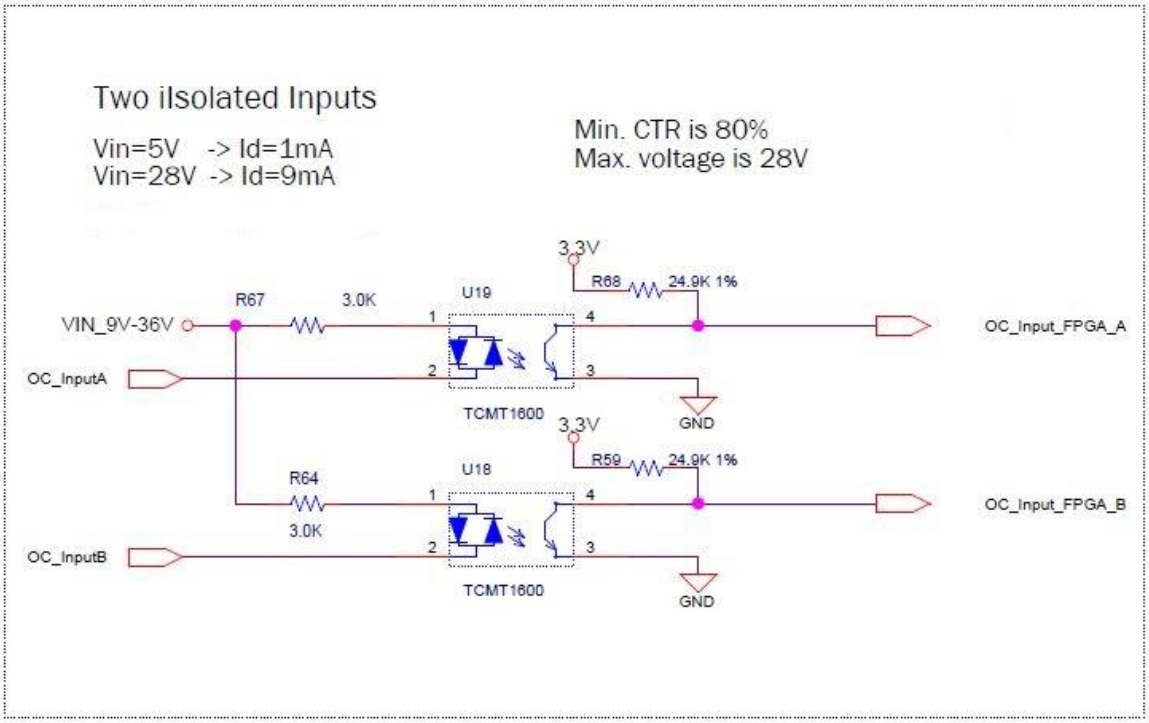

- Note that the common pin is connected to power (9v to 36v), so the inputs of this group can be used with external NPN devices (external current sinking devices).

Electrical interfaces – Digital Outputs:

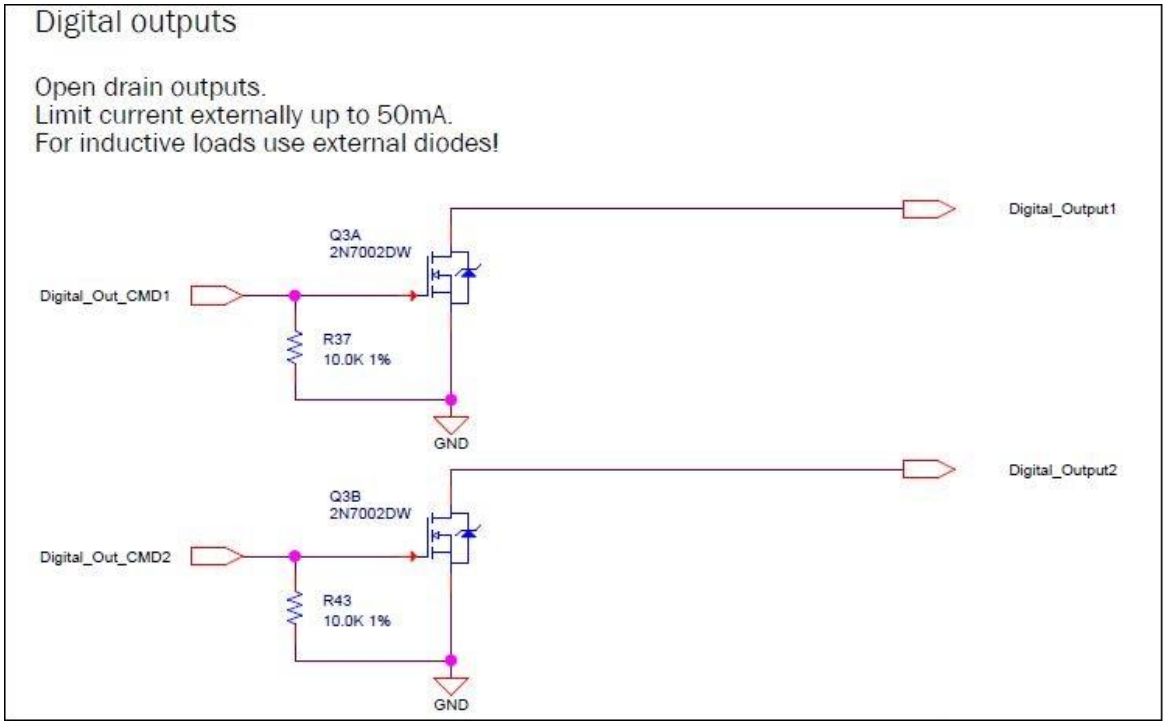

- The interface circuit is identical for outputs 1 to 4.
- Each output should be limited to 20mA.

Sample for connection with external driver:

Here we take ASD driver as the example to show the connection between ADP01 and ASD driver.

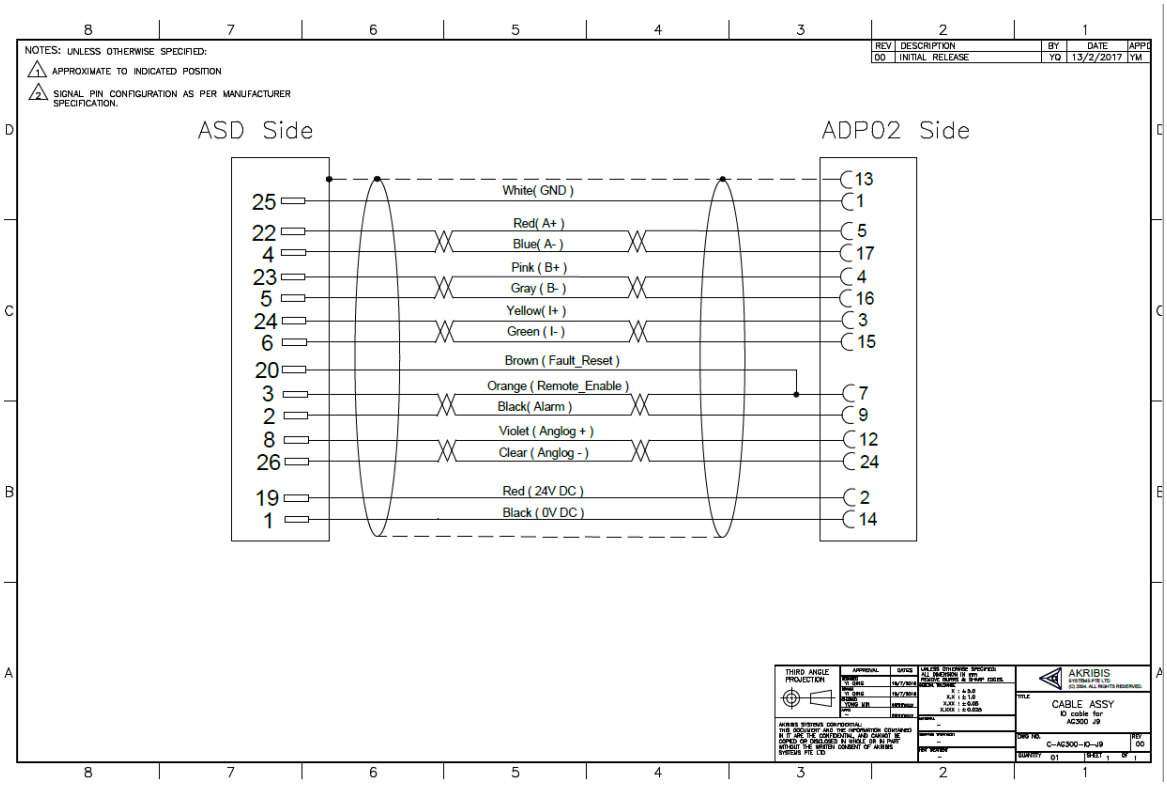

Adapter – J4 – Input for limit switches

J4 is used to give power to the limit switches from the rear side.

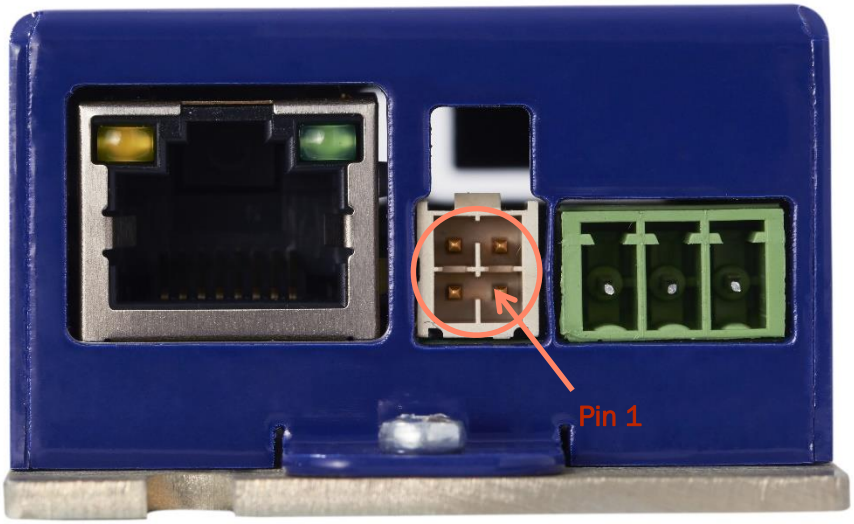

Figure 5 Limit Input Port

Description: The graph above is about the limit input port on the adapter board.
Manufacturer: SAMTEC
P/N (product side): IPL1-102-01-L-D-RA-K
Mating Type: IPD1-02-D-K
Crimp P/N: CC79L-2630-01-L

Note: This port is used for the connection of the limit switches

Pin #	Name	Type	Description
1	GND	PWR-OUT	Ground
2	VIN_9V-36V	PWR-OUT	9V-36V Power Out
3	OC_Input4	IN	4th isolated input, SW: DInPort (bit 3). NPN depending on connection of the common pin of this group
4	OC_Input3	IN	3rd isolated input, SW: DInPort (bit 2). NPN depending on connection of the common pin of this group

Environmental conditions

The table below shows the operating conditions for which this product can operate within

Requirement	Units	Allowed range
Operational temperature	°C	0 to 50
Storage temperature	°C	-20 to 70
Humidity	%	<90

References

[1] Central-i PN SN Definitions 6 March 2016.docx, 06-03-2016, V1.3