Central-I Family

CiG1-ADP01-1A-01-00

Hardware User's Manual

Revision control table			
Version	Description	Date	
1.0	Initial (based on Hardware Manual of previous hardware versions)	Sep 5,2016	Yiqing
1.1	Addition and Correction	Apr 26,2017	Yiqing
1.2	Adding connection for ADP01 with external driver	May 16,2017	Yiqing
1.3	Additions and Corrections	Aug 16,2017	Yiqing
1.4	Rearrange and Corrections	Aug 16,2017	Yiqing
1.5	Few typo corrections	Sep 18, 2018	LF

Table of contents

Scope 4

PRODUCT STRUCTURE 4

CIG1-ADP01-1A-01-XX 4

SYSTEM STRUCTURE 4

Overview 4

Products' variants 5

ADAPTER – CIG1-ADP01-1A-01-00 6

POWER PORT 6

Adapter – J4 – Input Logic Power 6

Adapter – J5 – Input IO Power 7

COMMUNICATION PORT 8

Adapter – J1 – Central-I 8

ADAPTER BOARD CONNECTORS 9

Adapter – J2 – External Amplifier Port 9

Adapter – J3 – System I/O Port 18

Environmental conditions 21

References 23

Scope

This manual describes hardware interfaces of the CIG1-ADP01-1A-01-00. [1]

Product description	Part numbers
Adapter	CIG1-ADP01-1A-01-00

The –XX defines a product's hardware variant, as describes below.

Product structure

CIG1-ADP01-1A-01-XX

The following pictures show the overall structure CIG1-ADP01-1A-01-XX Adapter, that the XX implies all variant types. All variants of this product type will use the same hardware that can be depicted in Figure 1.

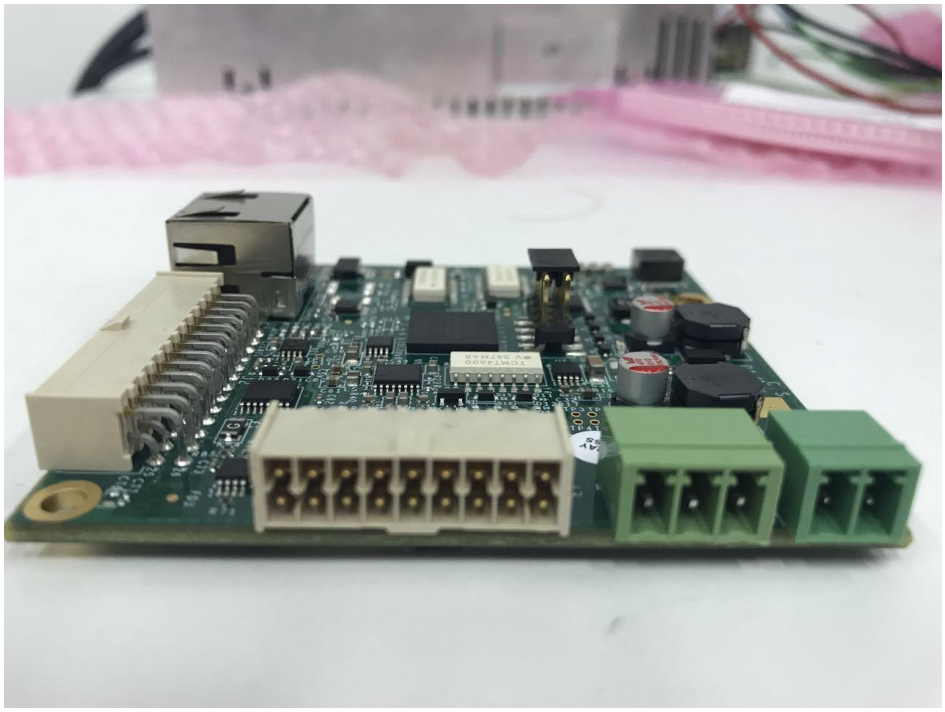

Figure 1: CIG1-ADP01-1A-01-XX Board Overview

System Structure

Overview

The following section will discuss all the hardware functionality that is supported by this product.

Products' variants

The –XX at the end of the product's part number (see label on the product) defines the product's variant. This product belongs to a subset of families from the Central-I range. It is meant to act as a slave unit to the CIG1-MAS controller variants communicating via the Central-I protocol. Detailed information regarding the part numbering for Central-I products see [1]

For the adapter:

CIGI-ADP01-1A-01-00:	Input Logic Power 9V~36V, up to 1A All hardware interfaces are assembled and included. Special amplifier port and I/O port Provide external 24V user power, up to 3A
CIGI-ADP02-1A-01-00:	Input Logic Power 9V~36V, Up to 1A All hardware interfaces are assembled and included. Simpler design with external drive port Give special power for limit switches.

ADAPTER – CIG1-ADP01-1A-01-00

This document provides a detailed description of the interface of the adapter.

Power Port

This chapter explains the two power port of the adapter and each port has its own function.

Adapter – J4 – Input Logic Power

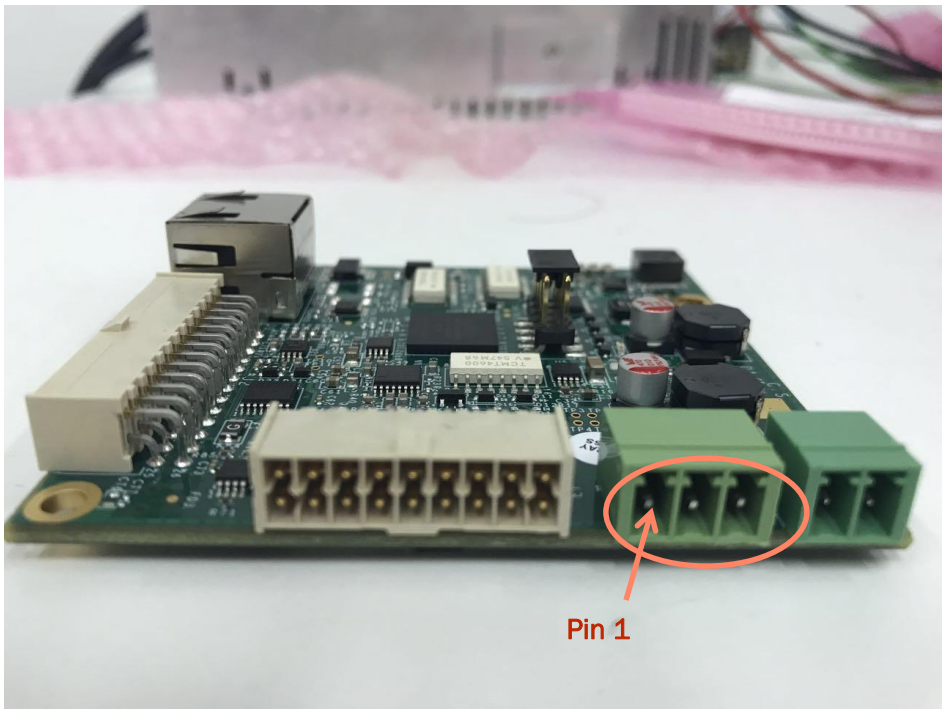

Figure 2 Input Logic Power

Description: The graph above is about the input logic power port on the adapter board.
Manufacturer: DEGSON
P/N (product side): 15EDGRC3.503P1400AH
Mating Type: MC 1,5/3-ST-3,5

Pin #	Name	Type	Description
1	VIN_EXTERNAL	PWR - IN	Input Logic Power,9V-36V, up to 1A
2	GND	PWR -IN	Logic power ground
3	GND_EARTH	PWR -IN	Earth ground connection

This power port is mainly designed to power the whole adapter, within the range of 9V~36V.

Adapter – J5 – Input IO Power

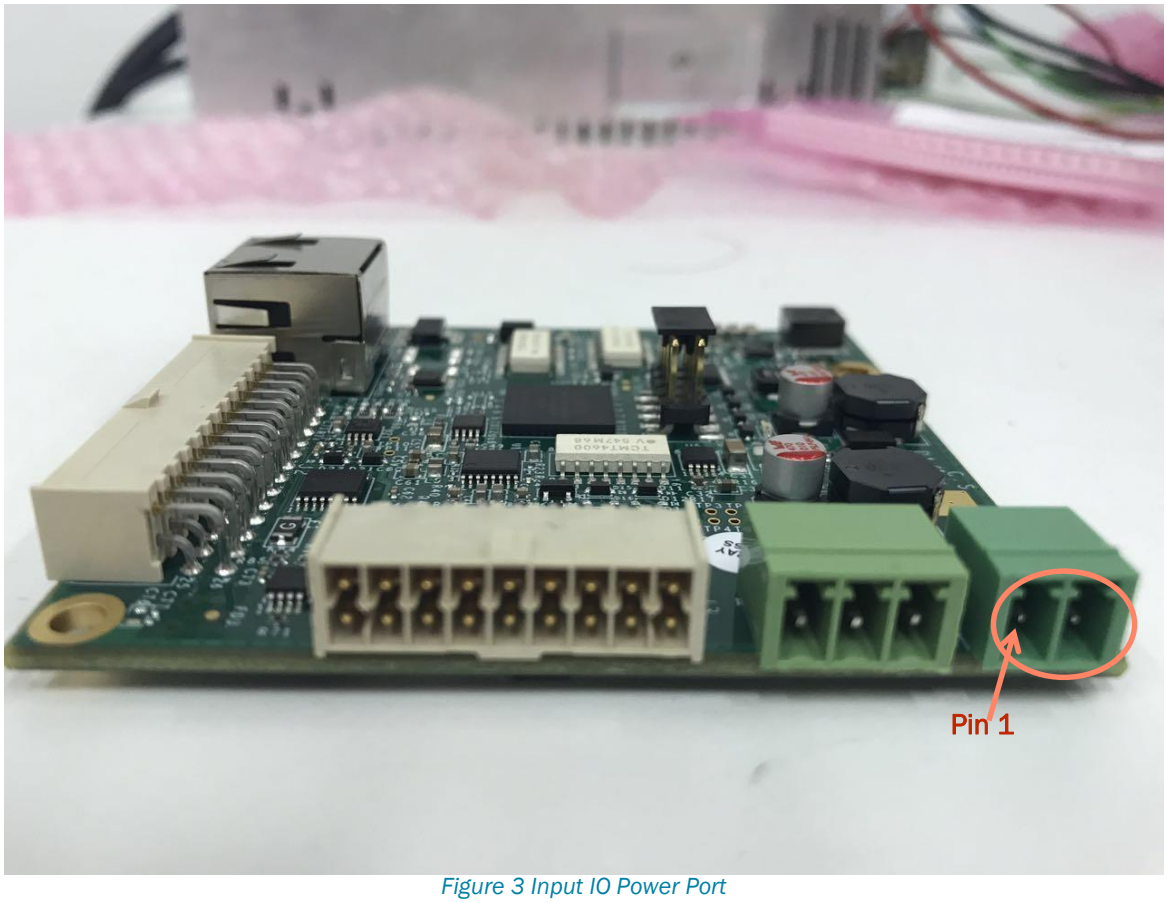

Figure 3 Input IO Power Port

Description: The graph above is about the input IO power port on the adapter board.
Manufacturer: DEGSON
P/N (product side): 15EDGRC3.502P1400AH
Mating Type: MC 1,5/2-ST-3,5

Pin #	Name	Type	Description
1	Vin_24V IO	PWR - IN	Logic Power,24V for external user, up to 3A
2	Vin_24V_IO_RTN	PWR -IN	Logic power ground

This power port is mainly designed to provide power for the inputs and outputs. If users wants to use the inputs and outputs, please ensure to power up this port.

Communication Port

This chapter describes the adapter's communication port.

Adapter – J1 – Central-I

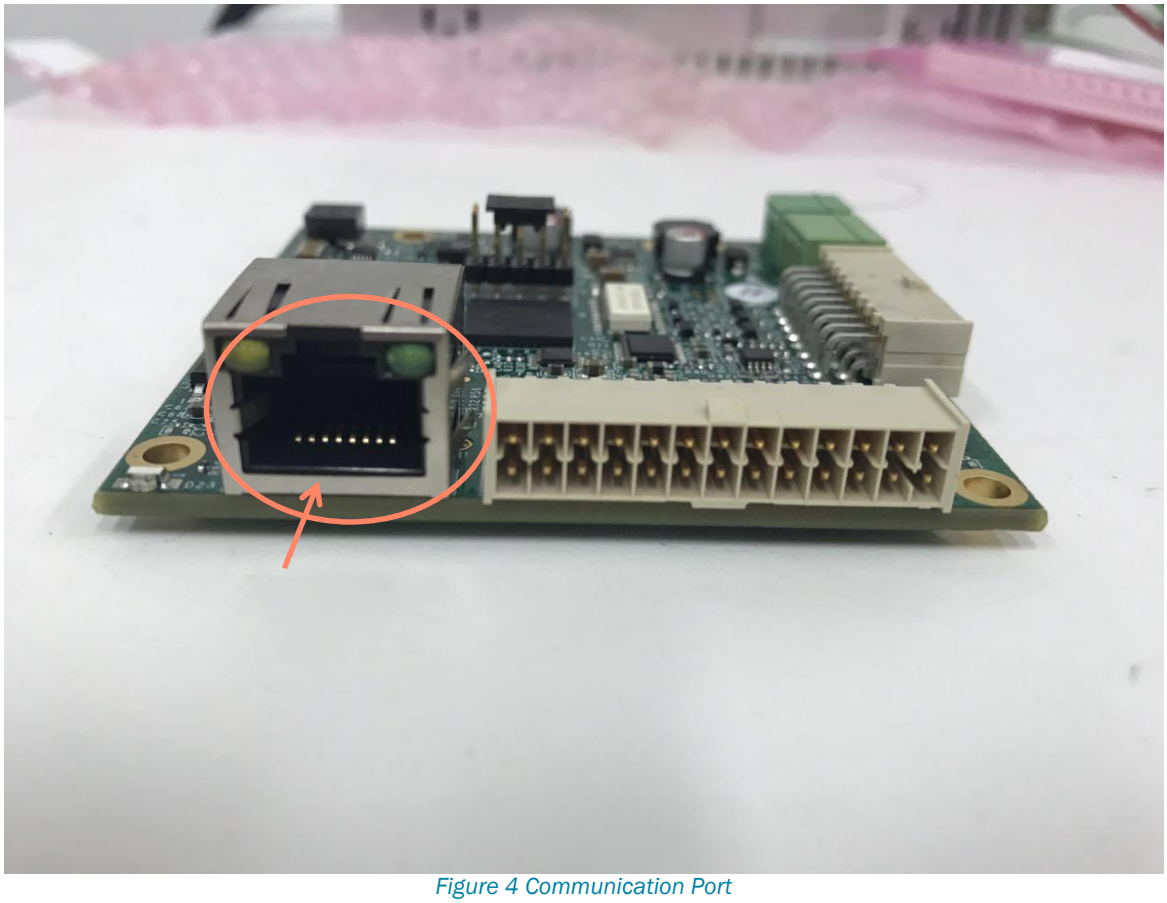

Figure 4 Communication Port

Description: CONN RJ45 8P8C R/A SHLD, LEDs

This connection is used for the connection between the adapter and the PC.

Note – 4th Channel:

Note that 4th Channel: CI_Data4 is connected to CI_5v and CI_GND for isolated variants.

Adapter board connectors

The chapter describes the connectors and interfaces of the adapter board.

Adapter – J2 – External Amplifier Port

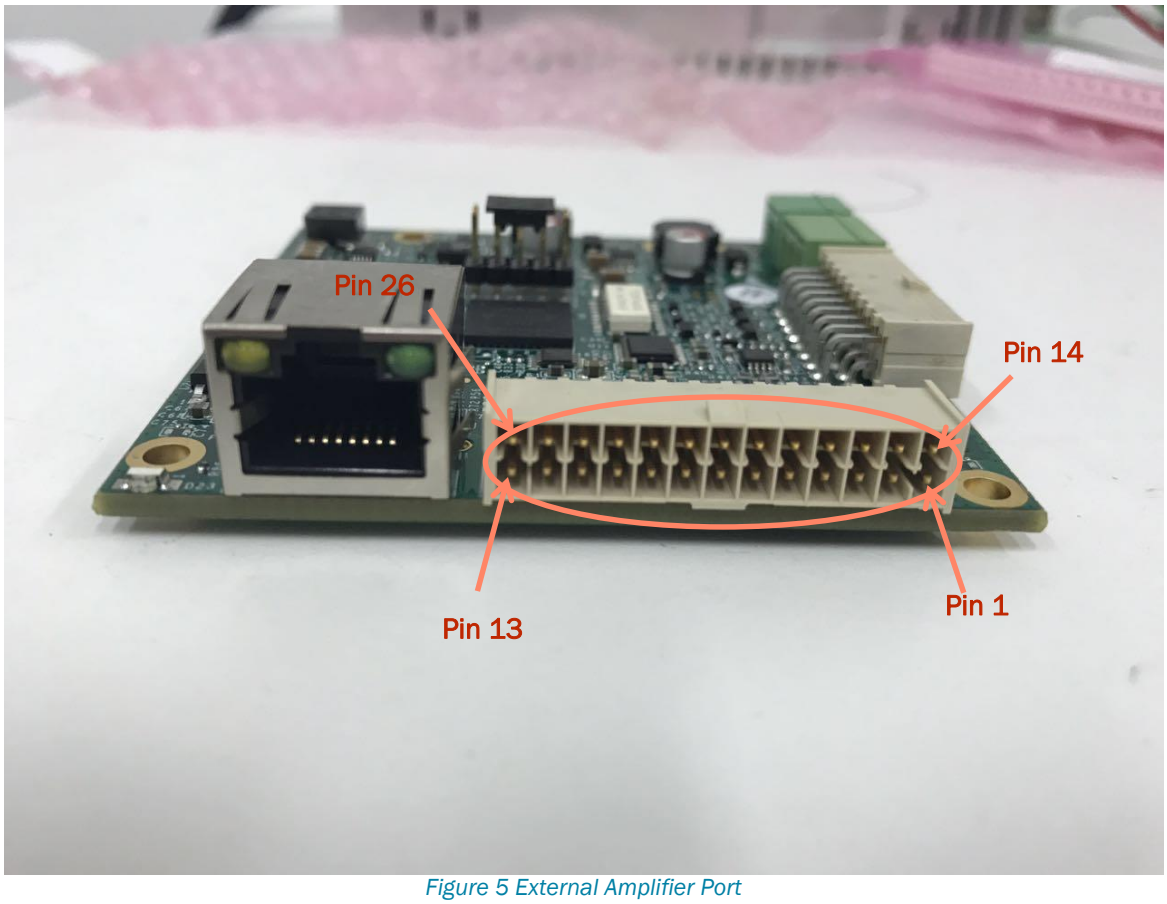

Figure 5 External Amplifier Port

Description: The graphs above is about the external amplifier port on the amplifier board.

Manufacturer:	Samtec Inc
P/N (product side):	IPL1-113-01-L-D-RA-K
Cable connector P/N:	IPD1-13-D-K
Crimp P/N:	CC79L-2630-01-L
	Other options are possible; please, consult with the manufacturer

Pin #	Name	Type	Description
1	Vin_24V_IO_RTN	PWR –OUT	24V IO Power Return
2	Vin_24V_IO	PWR - OUT	24V IO Power
3	OC_Output3	OUT	3rd isolated output, SW: DOutPort (bit 5). Programmable sink
4	OC_Output1	OUT	1st isolated output, SW: DOutPort (bit 3). Programmable sink
5	OC_Input1	IN	1st isolated input, SW: DInPort (bit 0). NPN, depending on connection of the common pin of this group
6	Dif_Out2+	OUT	Differential Output 2, positive pin DOutPort (bit 8).
7	Dif_Out1+	OUT	Differential Output 1, positive pin DOutPort (bit 7).
8	A_Encoder4+	IN	Differential input, not inverted
9	A_Encoder3+	IN	Differential input, not inverted
10	A_Encoder2+	IN	Differential input, not inverted
11	GND	PWR	Ground
12	Analog_output1+	OUT	Analog output1, not inverted AOutPort[1]
13	Analog_Input1	IN	Analog input1 AinPort[1]
14	GND_EARTH	PWR	Ground-Earth Connection
15	GND	PWR - OUT	GND for 5V and differential signals
16	5V	PWR - OUT	Power for 5V and differential signals
17	OC_Output2	OUT	2nd isolated output, SW: DOutPort (bit 4). Programmable sink
18	OC_Input2	IN	2nd isolated input, SW: DInPort (bit 1). NPN , depending on connection of the common pin of this group
19	Dif_Out2-	OUT	Differential input 2, negative pin
20	Dif_Out1-	OUT	Differential input 1, negative pin
21	A_Encoder4-	IN	Differential input, inverted
22	A_Encoder3-	IN	Differential input, inverted
23	A_Encoder2-	IN	Differential input, inverted
24	GND	PWR	Ground
25	Analog_output1-	OUT	Analog output1, inverted
26	Analog_Input1_return_1	IN	Analog input1 return

Note

1. The name of 'OC_*' means the digital input is optically coupled.

2. Input 1-2 are designed as 'NPN' type.

Note – Absolute Encoder Connection

Note that Absolute Encoder has the signal of Clock+ and Clock-, which should be routed to Dif_Out + and Dif_Out - .Absolute Encoder also has the signal of Data + and Data -, which should be routed to A_Enocder 4+ and A_Encoder 4- .

Sample Pin-out for Absolute Encoder:

Pin #	Absolute Encoder	ADP01
	0V	GND (Pin 15)
	5V	5V (Pin 16)
	A+	A_Encoder2+ (Pin 10)
	A-	A_Encoder2- (Pin 23)
	B+	A_Encoder3+ (Pin 9)
	B-	A_Encoder3- (Pin 22)
	Data +	A_Encoder4+ (Pin 8)
	Data -	A_Encoder4- (Pin 21)
	Clock +	Dif_Out 1+ (Pin 7)
	Clock -	Dif_Out 1- (Pin 20)

Note: 5v supply limitation:

Note that the 5v supply that is provided on both pin 9 in Port J10 and J12 is internally limited to 0.5A (both pins together). This is in order to protect the amplifier from short to GND.

Future firmware version of the amplifier will be able to detect and report this fault and to disable the 5v supply until the fault is fixed. Currently, the current will be limited, but the detection of this limit and the shutting off of the 5v supply is not supported yet.

Electrical interfaces – Discrete, Isolated, inputs:

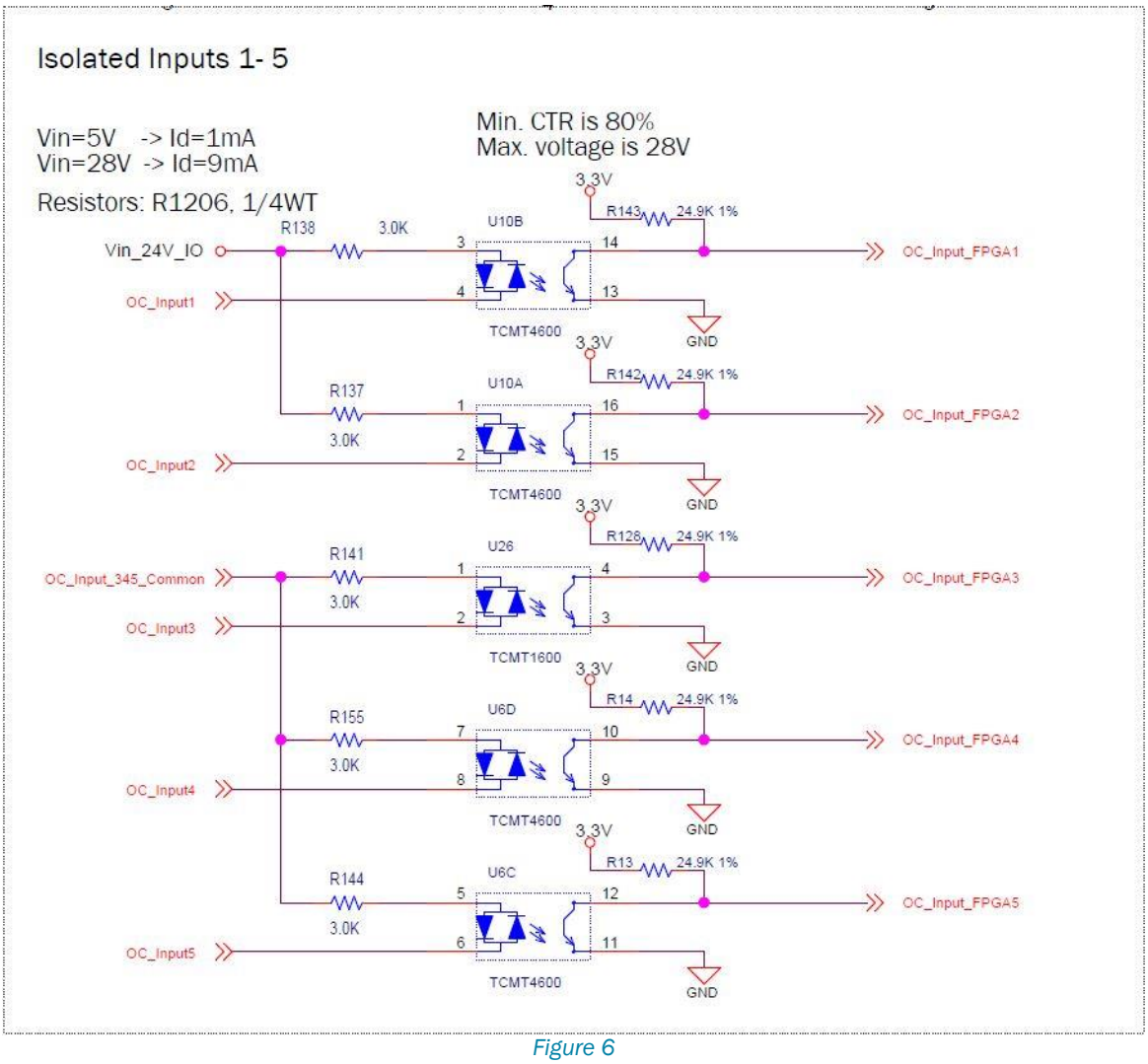

Figure 6

- The interface circuit is identical for inputs 1 to 2, which are organized as a single group.
- Note that the input circuit of the opto couplers includes two diodes. However, due to the group common pin of input 1 and 2 is connected with 24V, these two digital can only be used as NPN type.

Electrical interfaces – Analog inputs:

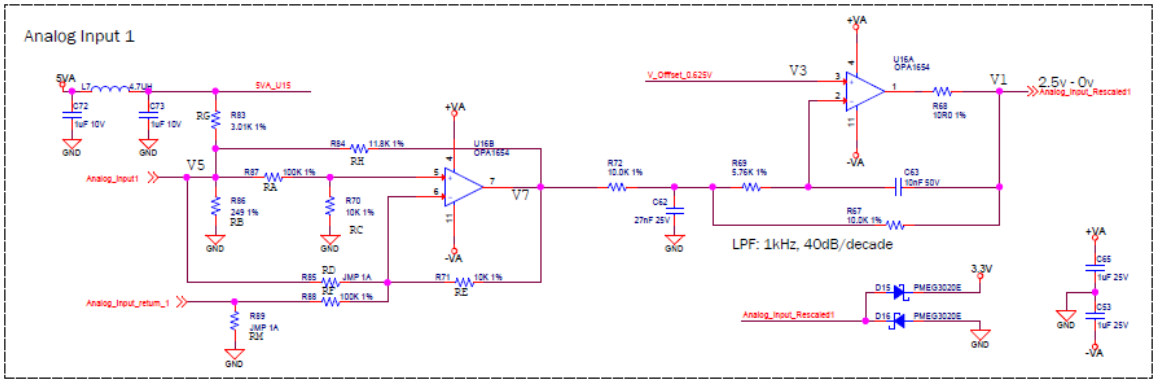

Figure 7

INPUT	VIN=-12V till +12V (Differencial)	VIN=-12V till +12V (Single Ended)	(4-20)mA (Single Ended)	FORCE SENSOR	PT100 SENSOR
RA	100 kOHm 1%	86.6 kOHm 1%	38.3 kOHm 1%	NC	11.0K 1%
RB	NC	NC	249R	NC	NC
RC	10 kOHm 1%	10kOHm 1%	10 kOHm 1%	0 OHm	NC
RD	NC	NC	NC	0 OHm	NC
RE	10 kOHm 1%	0 OHm	0 OHm	RFSR=min + 20% (*) (MAX. FORCE)	105K 1%
RF	100 kOHm 1%	NC	NC	NC	0 OHm
RG	NC	NC	NC	NC	3.01K 1%
RH	NC	NC	NC	NC	11.8K 1%
RM	NC	NC	NC	NC	12.4K 1%
	Default State				

Figure 8

- The analog inputs are -12v to +12v, 12 bits. The electrical interfaces of analog input 2 is identical to those of analog input 1.
- Input circuit drawing is quite complex, in order to optionally support variety of analog input sources. However, default assembly (see black mark) is for standard differential analog input, with a simple input circuit, having an input resistance of 60K ohms.
- Input circuit bandwidth: 1KHz, -40 db/dec.
- For dedicated (non-differential) analog input formats, as shown in the above table, or for any other type, please consult designer for dedicated hardware variants of product.
- The software provides parameters to control the analog input reading, as follows:
    - Filter.
    - Offset.
    - Dead band.
    - Gain.

Electrical interfaces – Differential Outputs:

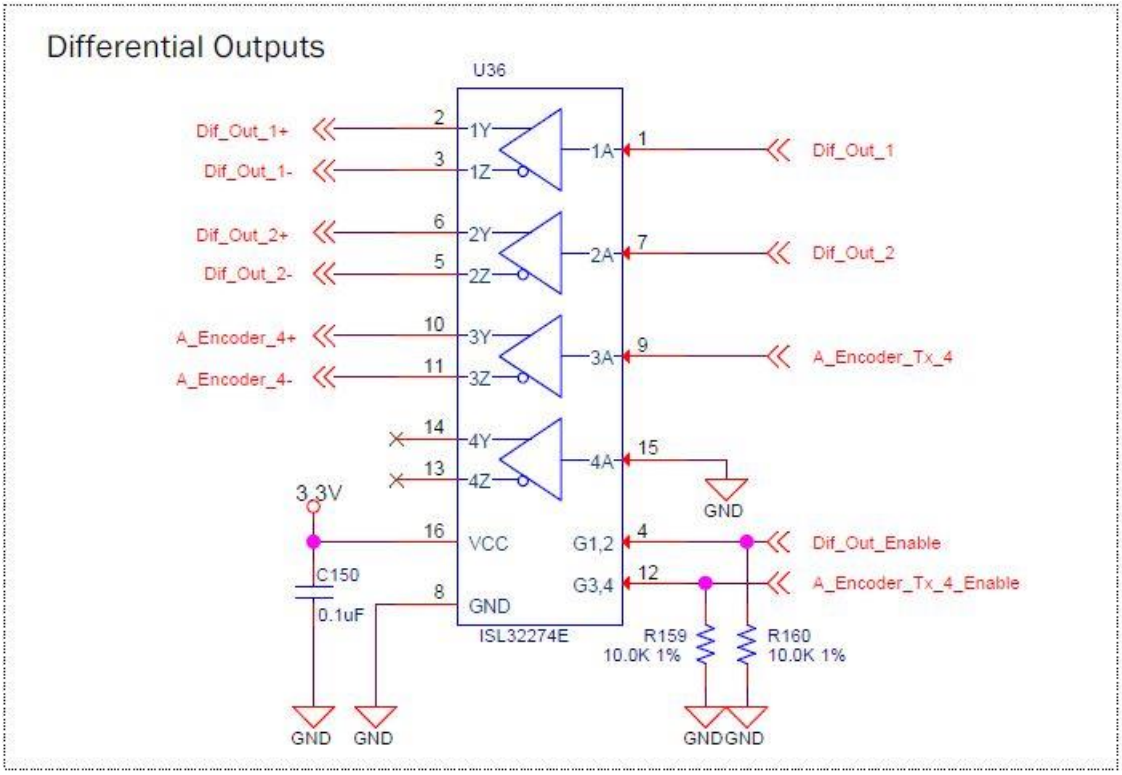

Figure 9

Electrical interfaces – Discrete, isolated, Outputs:

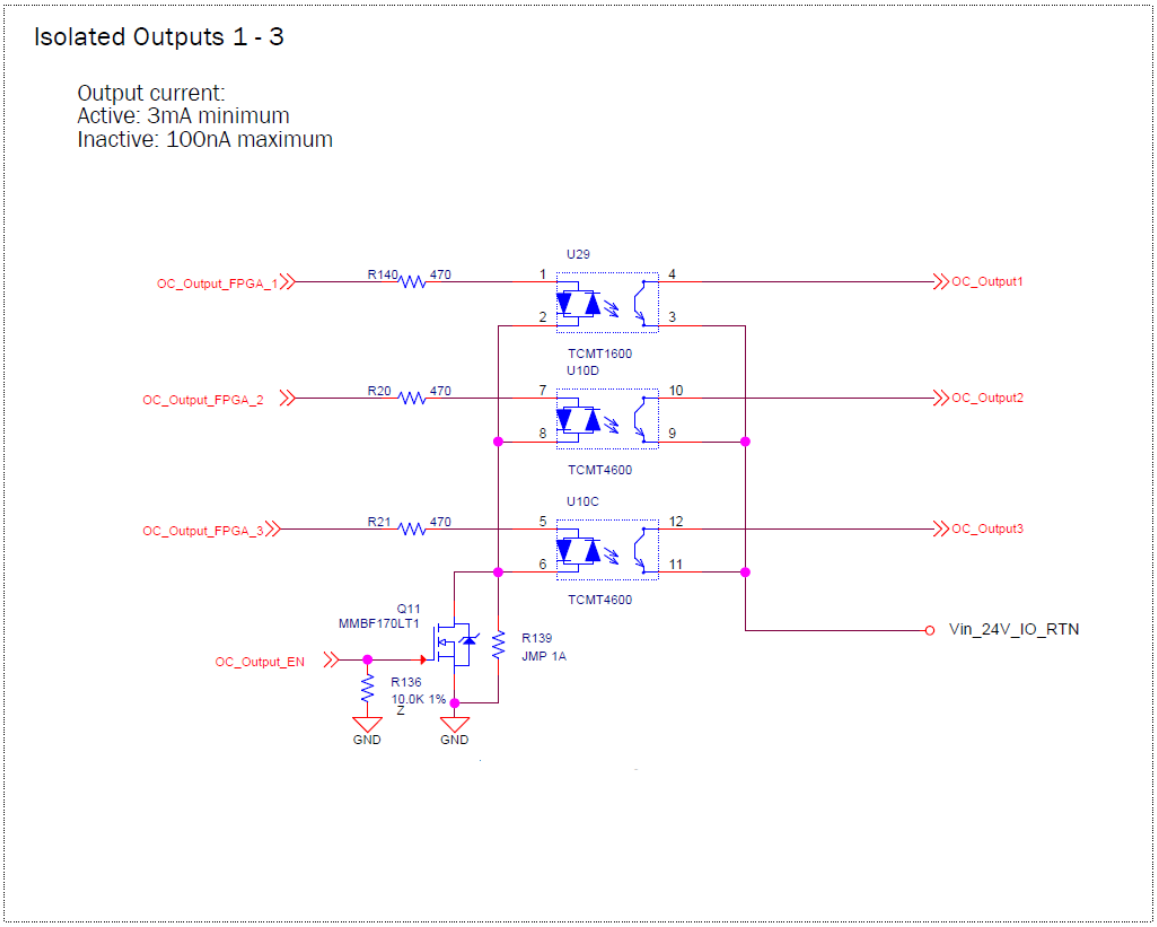

Figure 10

- The interface circuit is identical for outputs 1 to 3.
- Each output is designed to be 'sink' type.
- Common power is shared by all 3 outputs.
- Each output needs a minimum active current of 3mA.

Electrical interfaces – Analog outputs:

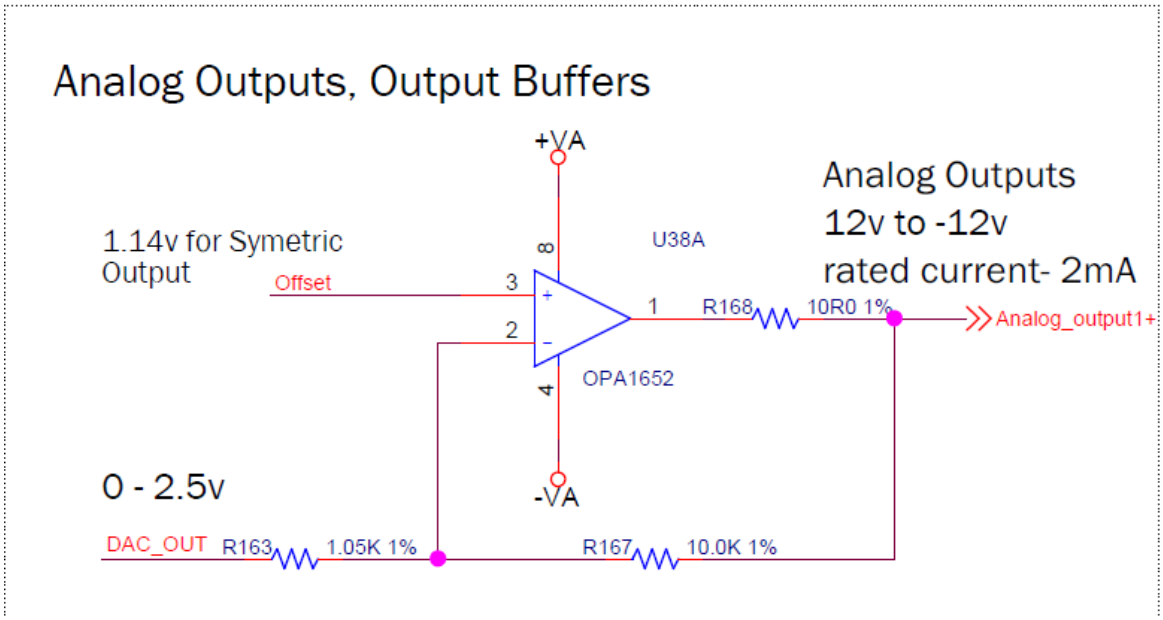

- The analog output is-12v to +12v, 16 bits.
- Output resistance is 10ohms.
- Output current is up to ±2mA, without internal current limitation.
- Analog outputs are controlled by the controller software in few operational modes:
  - Analog command to external amplifier.
  - Analog output controlled by the user for any generic purpose.
  - Analog output reflects the internal value of a user selected parameter (position, position error, velocity, current and actually any parameter/status of the controller), with a user defined scaling, for easy monitoring using an oscilloscope.

Sample for connection between ADP01 and external driver

Here, we use ASD as an example to show connection:

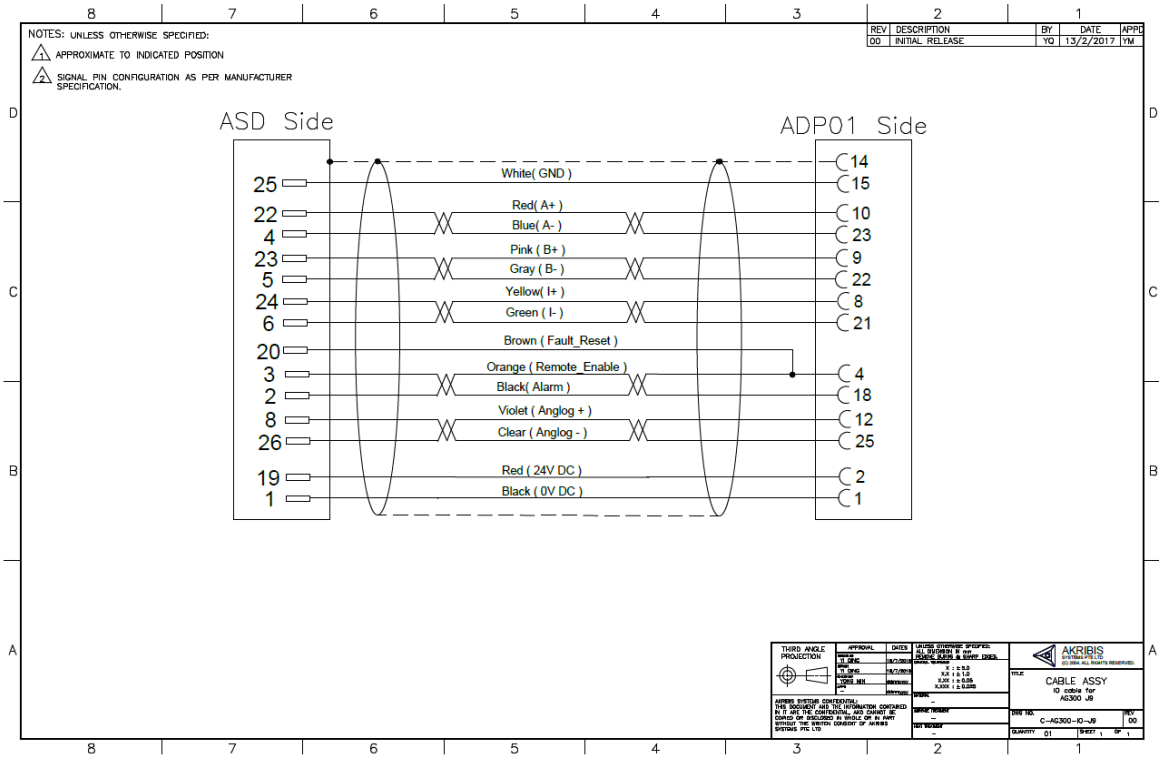

Adapter – J3 – System I/O Port

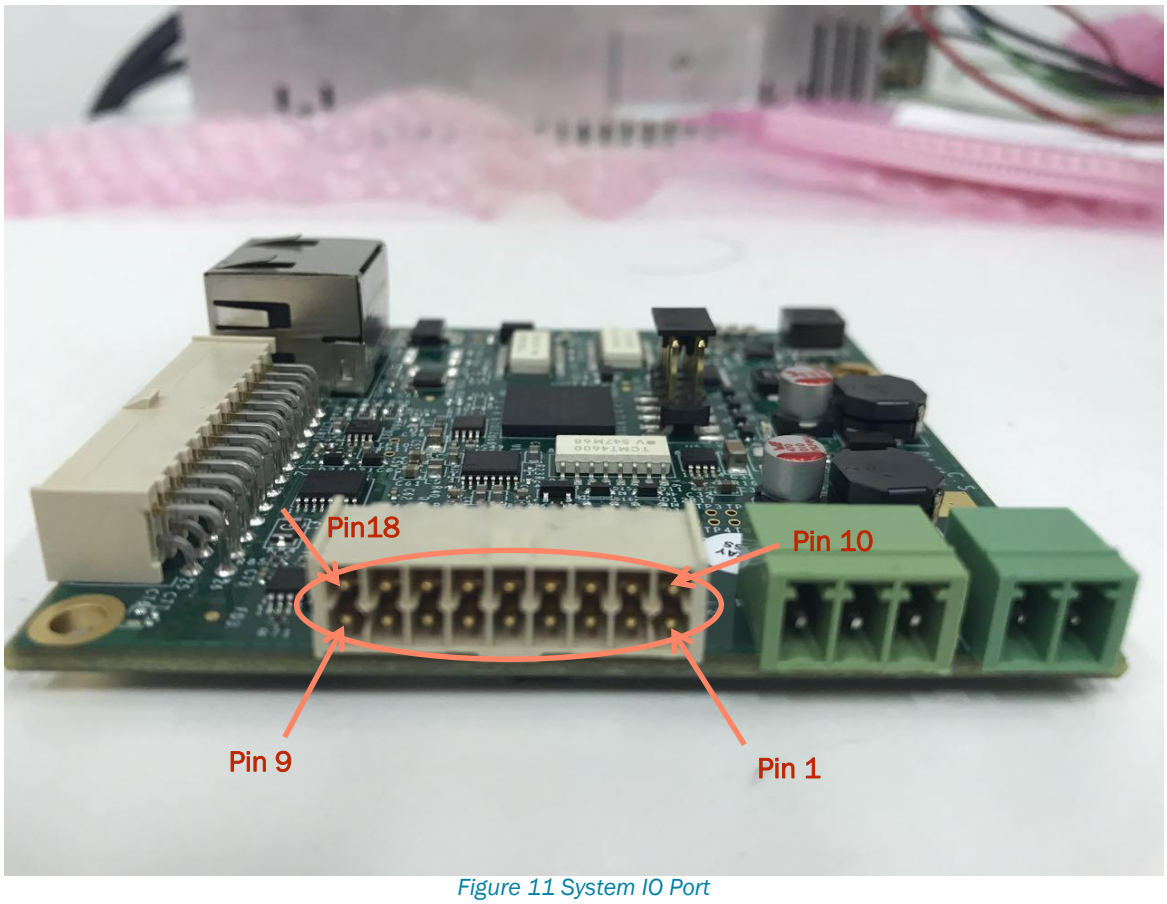

Figure 11 System IO Port

Description: The graph above is about the System IO port on the adapter board.
Manufacturer: Samtec Inc
P/N (product side): IPL1-109-01-L-D-RA-K
Cable connector P/N: IPD1-09-D-K
Crimp P/N: CC79L-2630-01-L
Other options are possible; please, consult with the manufacturer

Pin #	Name	Type	Description
1	Vin_24V_IO_RTN	PWR-OUT	24V Power Return for IO
2	Vin_24V_IO	PWR-OUT	24V Power for IO
3	OC_Output_SS_1	OUT	1st isolated output, SW: DOutPort (bit 0). Programmable sink or source
4	OC_Output_SS_123_Common_Power	PWR-IN	Common power pin for discrete, isolated, outputs 1 to 3
5	OC_Input4	IN	4th isolated input, SW: DInPort (bit 3). NPN or PNP, depending on connection of the common pin of this group NPN or PNP, depending on connection of the common pin of this group

Pin #	Name	Type	Description
6	OC_Input_345_Common	PWR-IN	Common pin (power or return, depending on external connection) for discrete, isolated, inputs 3 to 5
7	Dif_BiDir_1+	IN/OUT	Differential bi-directional input or output DOutPort (bit 6).
8	GND	PWR	Ground
9	Analog_Input_2	IN	Analog input 2, ±12v, 12 bit AinPort[2]
10	GND_EARTH	PWR	Ground-Earth Connection
11	OC_Output_SS_3	OUT	3rd isolated output, SW: DOutPort (bit 2). Programmable sink or source
12	OC_Output_SS_2	OUT	2nd isolated output, SW: DOutPort (bit 1). Programmable sink or source
13	OC_Output_SS_123_Common_Return	PWR-IN	Common power return pin for discrete, isolated, outputs 1 to 3
14	OC_Input5	IN	5th isolated input, SW: DInPort (bit 4). NPN or PNP, depending on connection of the common pin of this group
15	OC_Input3	IN	3rd isolated input, SW: DInPort (bit 2). NPN or PNP, depending on connection of the common pin of this group
16	Dif_BiDir_1-	IN/OUT	Differential bi-directional input or output
17	GND	PWR	Ground
18	Analog_Input_return_2	IN	Analog Input 2 return

Note

1. The name of 'OC_*' means optically coupled.

2. The name of 'OC_Output_SS' means the digital output is optically coupled and it can be programmed to be source type or sink type.

Electrical interfaces – Discrete, Isolated, inputs:

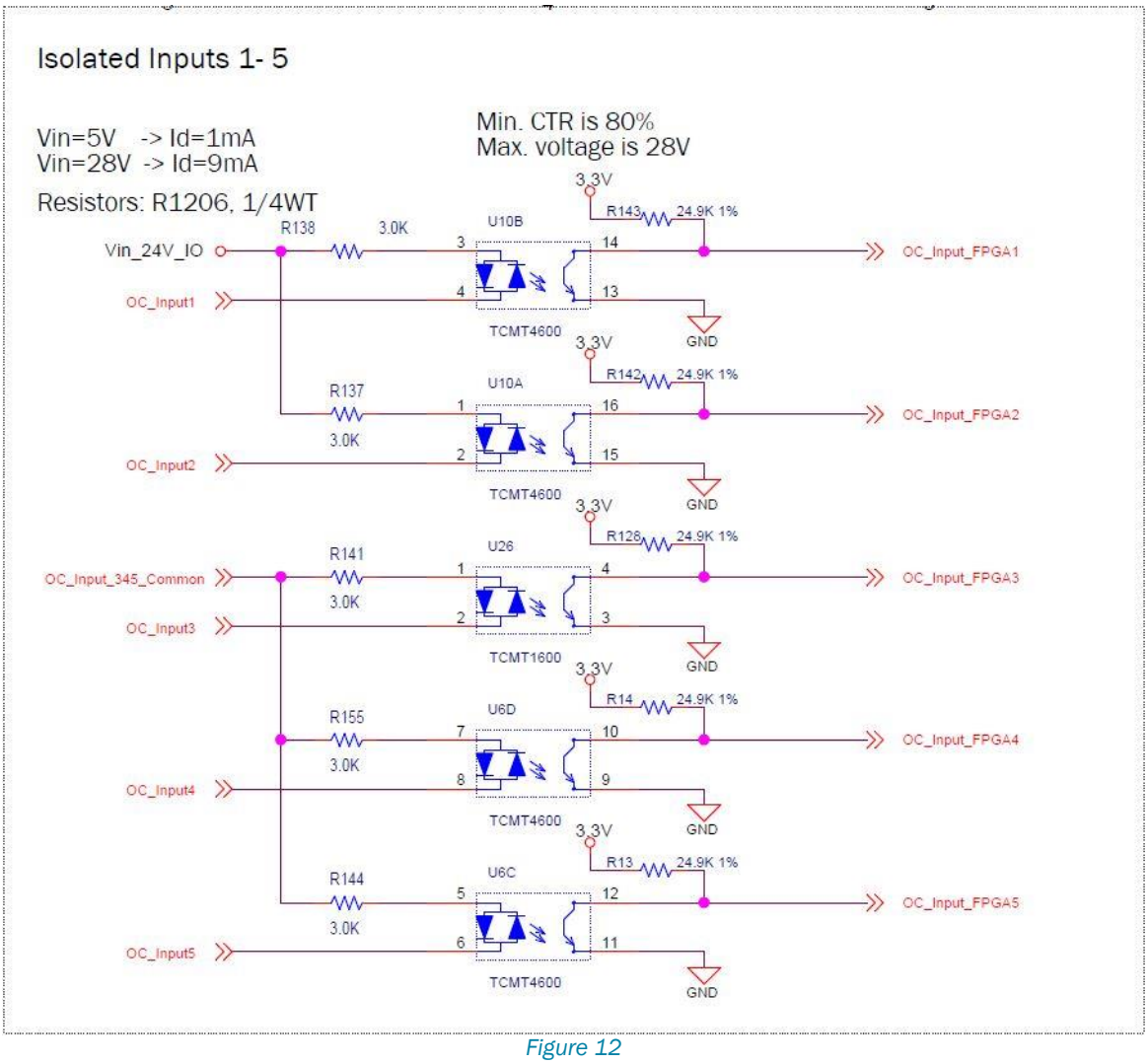

Figure 12

- The interface circuit is identical for inputs 3 to 5, which are organized as a single group.
- Each group is fully isolated and independent of the other groups.
- Each group can be connected as NPN or PNP interfaces, depending on the wiring of the group common pin. If the common pin is connected to power (5v to 28v), then the inputs of this group can be used with external NPN devices (external current sinking devices). If the common is connected to the GND of some external power, then the inputs can be used with external PNP devices (external current sourcing devices).
- Note that the input circuit of the opto couplers includes two diodes. This enables the usage as NPN of PNP.

Electrical interfaces – Discrete, Isolated, SS Outputs

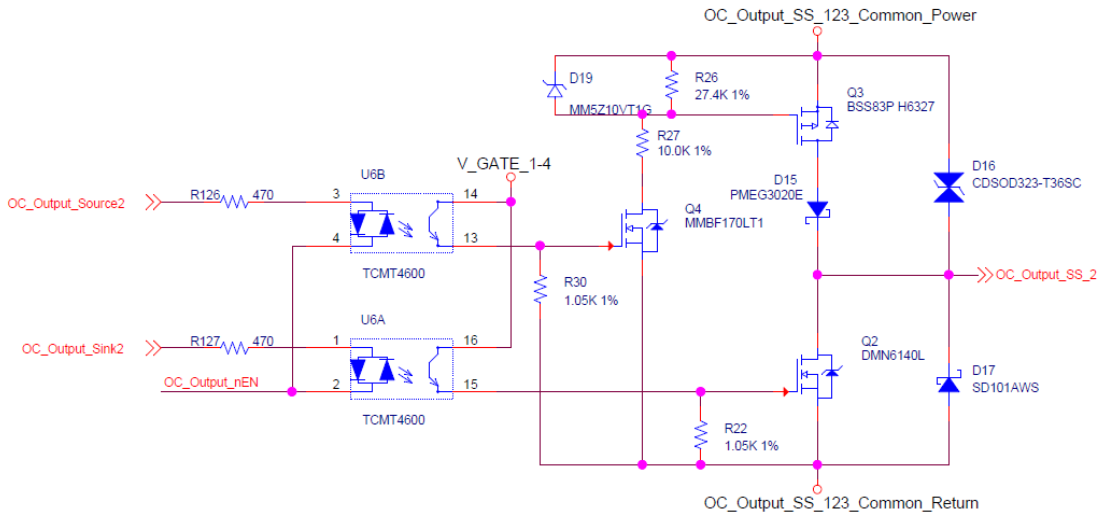

Figure 13

- The interface circuit is identical for all outputs 1 to 4 in Port J6 and outputs 5-8 in Port J8.
- Each output can be programmed (by a software parameter) to act as a current sourcing output (up to 300mA) or as a current sinking output (up to 500mA).
- Common power is shared by all 4 outputs.
- The outputs are designed for resistive loads. For inductive loads, an external flyback diode is required.
- Common power can go up to 45 volts. Yet, typical usage should be limited by 36v.
- Discrete outputs specifications:

  - Discrete outputs common power voltage range is 5v to 36v.
  - Maximal load current, per each output:

    a. SINK mode, at any common power voltage: 500mA
    b. SOURCE mode, at 24v common power voltage: 300mA.
    c. SOURCE mode, at 5v common power voltage: 60mA
    (Output high voltage > 4.5v).

  Notes:

    1. Higher currents (but less than absolute maximal value of 250mA) can be driven at SOURCE mode with 5v common power voltage. However, the output high voltage will drop significantly.
    2. For additional and more detailed data, please write to our support team.

Environmental conditions

The table below shows the operating conditions for which this product can operate within

Requirement	Units	Allowed range
Operational temperature	°C	0 to 50
Storage temperature	°C	-20 to 70
Humidity	%	<90

References

[1] Central-i PN SN Definitions 6 March 2016.docx, 06-03-2016, V1.3